Bigger and Better Than Ever!

Woodsmith®

www.woodsmith.com

Vol. 26 / No. 154

Woodsmith 25 YEARS 1979–2004

get the stain color you really want — *We'll Show You How*

learn the secrets to *Routing Half-Blind Dovetails*

build an heirloom *Tip & Turn Table*

$6.95 CAN

09

0 55113 57103 9

Please display until Sept. 27

A Publication of August Home Publishing

Table of Contents

departments

from our readers
Tips & Techniques 4

all about
Buying Veneer 8
Not sure what to expect when mail-ordering veneer? Learn how to get what you want.

jigs and fixtures
Routing Dovetails 10
We'll show you what to look for in a dovetail jig and some tips on getting perfect-fitting joints.

techniques from our shop
Working with Glass 14
A few tools and some proven techniques take the mystery out of cutting and shaping glass.

tips from our shop
Shop Notebook. 28

tools of the trade
Router Table Joinery 40
We tried out some joinery bits with great results.
ONLINE EXTRA video workshop

small shop solutions
Task Lighting 42
Five inexpensive lamps that shed new light on your shop and woodworking projects.

working with tools
Perfect Pieces on the Table Saw 44
Accurate, consistent results everytime.

finishing room
Mixing Your Own Stain 46
Can't find that perfect wood stain color? Learn to mix your own and get the color you want.

in the mailbox
Q & A 48

hardware and supplies
Sources 49

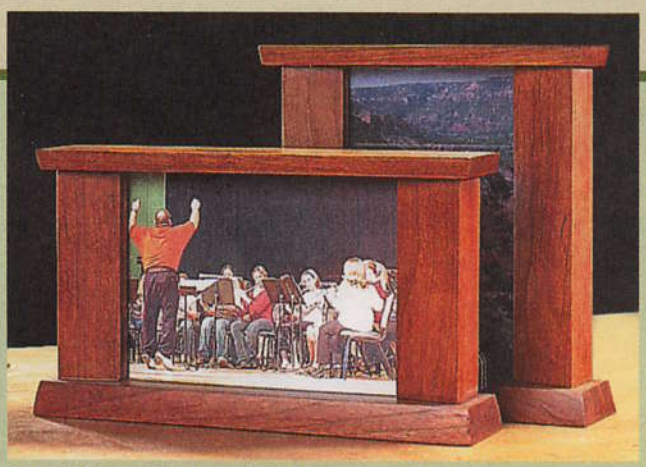

No-Miter Picture Frames page 16

Tip & Turn Table page 30

features

weekend project

No-Miter Picture Frames 16

These stylish frames feature simple joinery and won't take a lot of time or materials.

designer series project

Corner Media Cabinet 20

Make the most of your corners. This corner media cabinet holds a large-screen TV but doesn't take up the whole room in the process.

DESIGNER'S NOTEBOOK

heirloom project

Tip and Turn Table 30

There's no mistaking the classic look of this table. Its standout features include striking veneer, a "birdcage" mechanism, and a pedestal base.

DESIGNER'S NOTEBOOK ONLINE EXTRA video workshop

details of craftsmanship

A Tapered Sliding Dovetail 50

We'll show you why we used this unique, locking joint on the tip and turn table and how you can put it to use in your projects.

Corner Media Cabinet page 20

Woodsmith 25 YEARS 1979-2004

editor's note

Sawdust

One of the things I like about woodworking is that there's almost always more than one way to go about a job. A perfect example of this is the tip and turn table on page 30.

When we were planning the table, we spent a lot of time discussing what kind of top to make. And I think the twelve-sided, veneered plywood top we came up with looks great. (You can see it on the cover.) But shortly after we finished building and photographing the table for this issue, Ted Raife, one of our editors, came to me with an idea for making a round, dished top out of solid wood using a router.

Ted's procedure involved using a trammel along with the router to create the molded edge of the top. Then the router is mounted on a sled that allows you to dish out the center of the top. I have to admit that it sounded pretty intriguing. But unfortunately, as interesting as Ted's idea was, there just wasn't enough space in the magazine to include it as part of the table article.

Now a couple of years ago, that would have been the end of the story. But that's no longer the case. With the internet, we now have a way to give you all the additional information and little "extras" that there never seemed to be room for before. So, right now, you can visit our website at www.Woodsmith.com and actually watch a video of Ted making the round, dished table top.

Terry

ONLINE EXTRA video workshop

Woodsmith GO ON-LINE EXTRAS

These two symbols let you know there's more information online at www.Woodsmith.com. There you'll see step-by-step videos, technique and project animation, bonus cutting diagrams, and a lot more.

Router Bit Storage Rack

A good router bit storage system should do two things. First, it should make it easy to locate and pick out the bit you need. Second, the rack should keep the cutting edges from knocking together, which could cause them to chip.

I tried drilling holes in a hardwood block to make a simple rack. But seasonal changes would freeze the bits in place, making them difficult to remove. While oversize holes leave the bits too wobbly.

Working in the kitchen, I came up with the solution — a rack made from a piece of plastic cutting board, as you can see in the photo at right. The cutting board plastic doesn't expand and contract and is naturally slippery so the bits easily slide in and out.

I bought a new one at a grocery store and cut it to the size I needed. A series of holes drilled in it fits both ½"-dia. and ¼"-dia. bits.

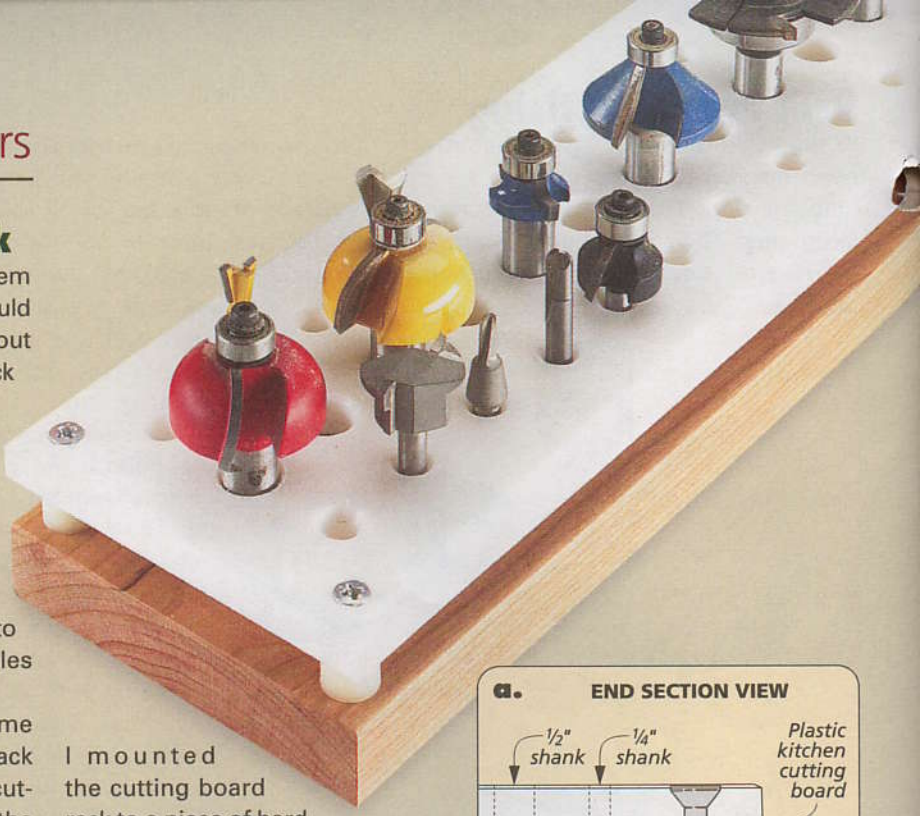

I mounted the cutting board rack to a piece of hardwood with screws and some nylon spacers, as shown in detail 'a.' The spacers keep the bits from tipping over. The rack is small enough to let me take it wherever I need to go.

Alex Burrett
Braintree, England

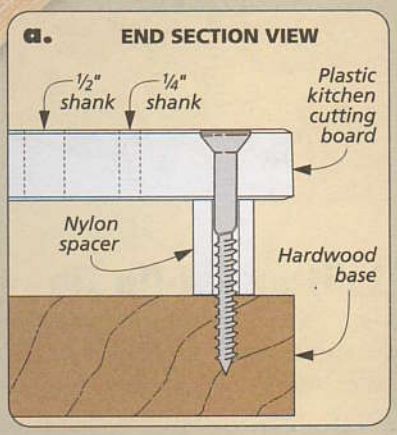

Large-Circle Compasses

Every once in a while in the shop, I need to layout a large-diameter circle or arc. Since I didn't have a large compass, I made a pair of my own out of some scraps and a few pieces of hardware, as you can see in the photo below. They easily handle most of my circle and arc layout needs. One compass will lay out circles up to 2' in diameter. The larger one can mark up to a 4'-dia. circle.

The legs of the small compass are made from a couple of straight 16" lengths of ½"-square stock that's cut to length. The legs are secured at one end with a machine screw, a washer, and a wing nut.

The legs of the large compass are ¾"-square stock that is cut 28" long. To hold the parts together for this one, I substituted the machine screw for a larger carriage bolt.

On the business end of each leg, I drilled a hole. One is for a pencil stub to fit in. On the other leg, I drilled a smaller hole and tapped in a cut-off nail. To make it more comfortable to hold the larger compass, I chamfered the ends near the nail and pencil. That's really all there is to it.

Like any compass, I use a ruler to set the radius and then tighten the wing nut. (Sometimes, I use pliers to apply a little extra force to keep the legs from slipping.)

Ted Raife
Des Moines, Iowa

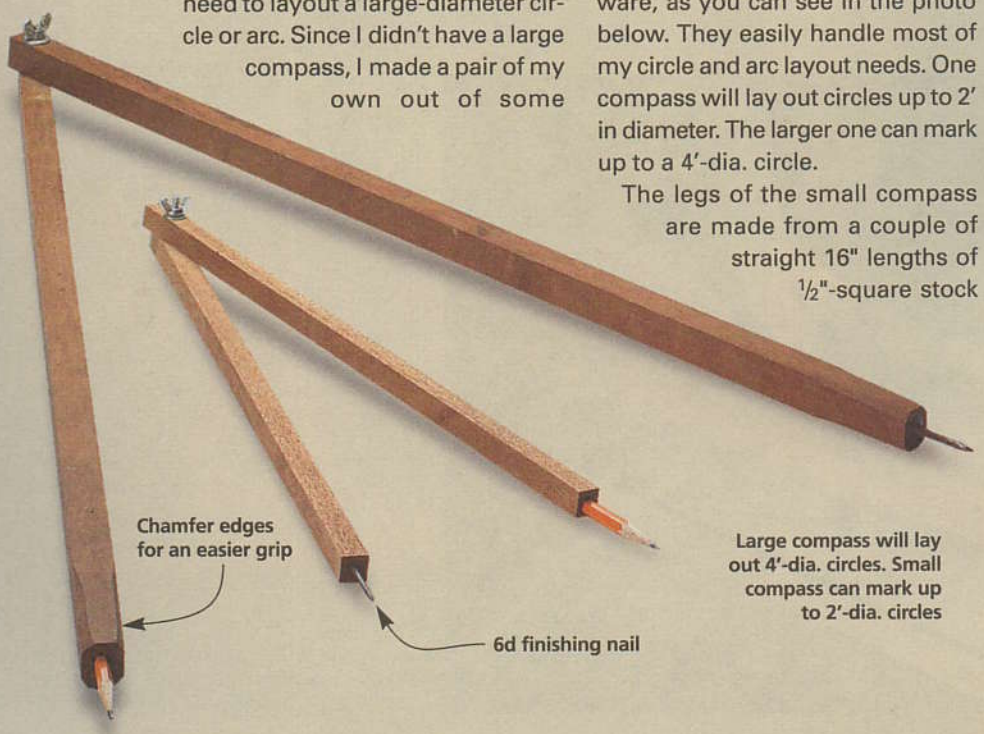

Trellis Jig

This spring, I was making some trellises for our yard. After cutting all the parts to size, I was ready to start assembling the pieces and discovered two problems. First, there was no easy way to keep the spacing of the parts consistent. And second, I needed a way to make sure the assembly stayed square as the parts were fastened together.

So to accomplish these goals, I made a layout and assembly table, as you can see in the drawing below. It's nothing more than a sheet of 3/4" plywood with a 1/4" hardboard top that I set up on a pair of sawhorses. I cut a grid of dadoes in the table to keep the lattice parts in place. One set is cut twice as deep as the other so the pieces cross and stay aligned, as in the detail below. The size of the dadoes depends on the trellis stock you are using (1/2" x 1" in my case). The dadoes are located 6" on center.

David Schmettering
Missoula, Montana

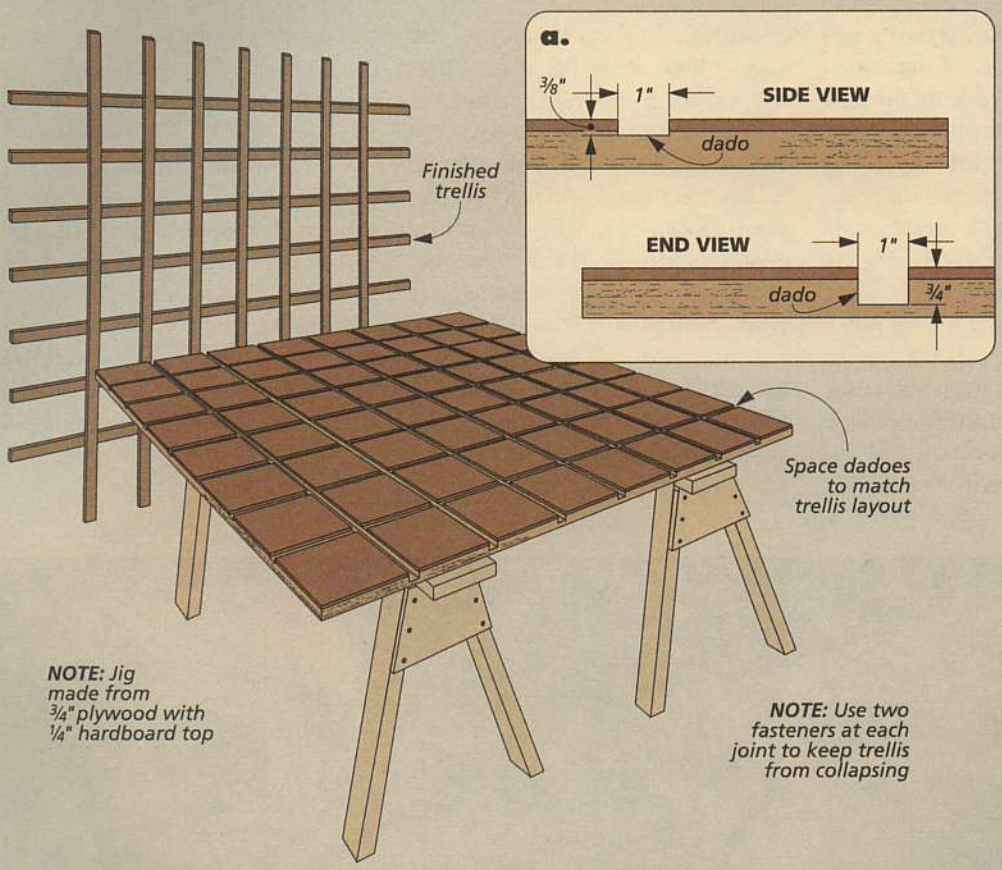

Quick Tips

SHOP VACUUM HOSE CAP

Sawdust ends up covering my toolboxes, tools, and places where small parts are stored. To solve this clean-up problem, I drilled 1/4" holes in the cap of a spray paint can and placed it over the end of the 2 1/2"-dia. hose on my shop vacuum. The suction keeps it in place and nothing but sawdust enters my vacuum.

Jeff Bricker
Amelia, Ohio

SHOP PENCIL ON A ZINGER

I am always looking for a pencil at my miter saw station. So I drilled a hole in the end of a carpenter's pencil and attached it to a retractable key chain. Then I attached the key chain to the fence so it's always handy.

John Boyers
Montrose, Colorado

DISPOSABLE TACK RAGS

Whenever I need a tack rag for removing dust prior to a finishing job, I lightly coat one of my clean shop rags with spray adhesive. It won't make my hands sticky and I can trash it after use. I just make a clean tack rag for the next job.

Bill Levy
Coppell, Texas

Win This Bridge City Block Plane

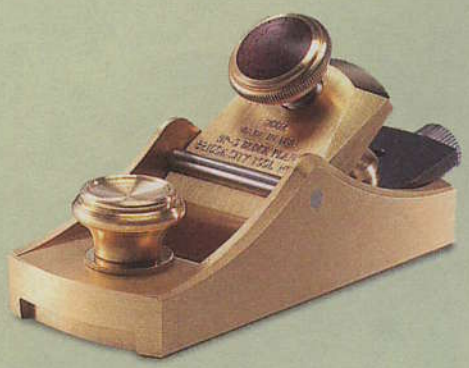

That's right, send us your shop tips. If your woodworking tip or technique is selected as the featured reader's tip, you'll win a Bridge City Block Plane just like the one shown here. Send your tips and techniques to: *Woodsmith,* Tips and Techniques, 2200 Grand Avenue, Des Moines, Iowa 50312. Or send us an email message at: woodsmith@woodsmith.com.

The Winner!

Congratulations to Richard Tonelli of Loganville, Georgia. His tip on making a hand saw pegboard storage rack was selected to be the winner of a Bridge City Block Plane just like the one shown at left.

Storage space in his shop is in short supply. The rack he made helped him maximize the wall space and still kept the saws at the ready.

Tips & Techniques

Hand Saw Pegboard Storage

Although my table saw and band saw do most of the cutting in my shop, for some jobs, a hand saw is quicker and easier. The problem is finding a place to store them within easy reach. My solution is a simple rack that fits on the pegboard mounted above my workbench, as shown in the photo at left.

The rack is made up of two parts. The curved saw handles rest on a dowel slipped over a pair of long pegboard hooks. The blades of the saws are secured in a piece of hardwood with slots cut in it. A pair of holes drilled in the back fit over short, L-shaped hooks, as in the drawing below. You can size the rack to hold almost any number (or size) of saws.

Richard Tonelli
Loganville, Georgia

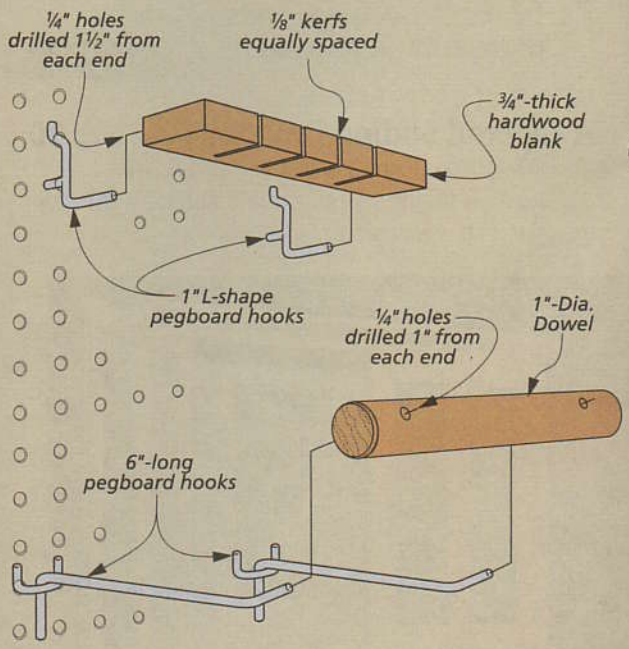

SUBMIT YOUR TIPS

If you have an original shop tip, we would like to hear from you and consider publishing your tip in one or more of our publications. Just write down your tip and mail it to: *Woodsmith,* Tips and Techniques, 2200 Grand Avenue, Des Moines, Iowa 50312. Please include your name, address, and daytime phone number in case we have any questions. If you would like, FAX it to us at 515-282-6741 or send us an email message at: woodsmith@woodsmith.com. We will pay up to $200 if we publish your tip.

Drill Press Mortising

While building some doors recently, I needed a way to cut the mortises for the hinges. I've tried using a hand-held router in the past. The router makes clean cuts and it's easy to set the depth precisely, but it can be difficult to see what's going on. So I came up with a different technique.

Instead of using the router, I chucked a ¼"-dia. straight bit in my drill press, as illustrated in the drawing at left. Now I can see what's happening and still get the same, clean cut and precise depth control.

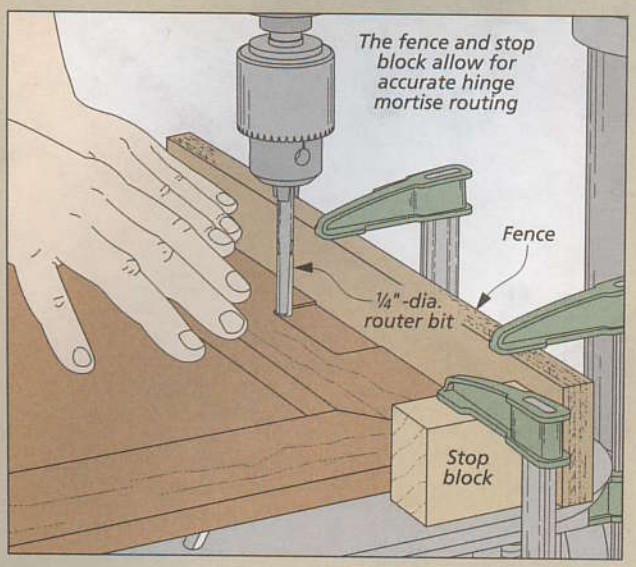

For best results, you'll need to set the drill press to the highest possible speed. And I clamped a fence and stop block in place to guide the workpiece as the mortise is cut. Then you can set the depth of the bit and turn on the drill press. Slowly slide the workpiece into the bit and rout out the mortise.

George Sherwood
Kingston, Ontario, Canada

Splitter Set-Up Jig

Using a splitter on the table saw is an important safety step. It keeps the workpiece from binding against the blade, causing kickback. The problem is it can be such a hassle to put the splitter on and get it properly aligned with the blade. Even if it's off by a small amount, the workpiece can catch during a cut and spoil the edge.

To get around this problem, I made a simple set-up jig. As you can see in the photo below, it's only a long piece of plywood with a saw kerf cut in it.

To use it, I slip the blade in the kerf so the jig extends past the end of the saw table (make sure the saw is unplugged). Then I slide the splitter through the kerf and lock it in place. Now it's perfectly aligned and ready to go.

Jim Sopher
Joliet, Illinois

Woodsmith

No. 154 August/September, 2004

Publisher Donald B. Peschke
Editor Terry J. Strohman
Assistant Editors Ted Raife, Phil Huber, Ron Johnson
Contrib. Editors Vince Ancona, Bryan Nelson
Art Director Todd Lambirth
Senior Illustrators David Kreyling, Dirk Ver Steeg, Harlan V. Clark
Illustrators Peter J. Larson, Dave Kallemyn

CREATIVE RESOURCES
Creative Director: Ted Kralicek • *Sr. Project Designers:* Ken Munkel, Kent Welsh, Ryan Mimick, Chris Fitch • *Shop Craftsmen:* Steve Curtis, Steve Johnson • *Sr. Photographer:* Crayola England

SPECIAL PUBLICATIONS
Corp. VP: Douglas L. Hicks • *Art Director:* Douglas A. Flint • *Senior Graphic Designer:* Chris Glowacki • *Videographer:* Mark Hayes, Jr. • *Graphic Designer:* Katie Beckman • *Senior Editor:* Craig Ruegsegger • *Assoc. Editor:* Joel A. Hess

CIRCULATION
Circ. Oper. Director: Sandy Baum • *Circ. Marketing Dir.:* Wayde J. Klingbeil • *Strategic Business Analysts:* Kris Schlemmer, Paula M. DeMatteis • *Circ. Marketing Analyst:* Patrick Walsh • *Renewal Mgr:* Paige Rogers • *Circ. Marketing Assoc.:* Christine Forret • *Circ. Fulfillment Mgr.:* Stephanie Forinash • *Sr. Graphic Designers:* Robin Friend, Randy Shebek

CORPORATE SERVICES
VP of Finance: Mary R. Scheve • *Controller:* Craig Stille • *Sr. Account.:* Laura J. Thomas • *Accts. Payable:* Mary J. Schultz • *Accts. Receivable:* Margo Petrus • *Dir.of Financial Analysis:* Lesia Smith • *Production Dir.:* George Chmielarz • *IT Manager:* Brian VenHeaverswyn • *Electronic Pub. Dir.:* Douglas M. Lidster • *System Administrator:* Cris Schwanebeck • *PC Maint. Tech.:* Robert D. Cook • *Pre-press Image Specialists:* Troy A. Clark, Minniette Johnson • *Assoc. Style Dir.:* Rebecca Cunningham • *New Media Mgr.:* Gordon C. Gaippe • *Web Site Art Dir.:* Gene Pedersen • *Web Server Admin.:* Carol Schoeppler • *Web Content Mgr.:* David Briggs • *Web Designer:* Kara Blessing • *Web Producer:* Terry Walker • *Research Coordinator:* Nick Jaeger • *Pro. Development Dir.:* Michal Sigel • *Benefits Spec.:* Jenny Westover • *Office Mgr.:* Natalie Lonsdale • *Facilities Mgr.:* Kurt Johnson • *Admin. Asst./Receptionist:* Jeanne Johnson • *Mail Room/Delivery:* Lou Webber

Woodsmith® (ISSN 0164-4114) is published bimonthly (Feb., Apr., June, Aug., Oct., Dec.) by August Home Publishing Company, 2200 Grand, Des Moines, IA 50312.

Woodsmith® is a registered trademark of August Home Publishing.
Copyright© 2004 August Home Publishing Company. All rights reserved.

Subscriptions: Single copy: $4.95. One year subscription (6 issues), $24.95. (Canada/International add $10 per year, U.S. funds.)
Canadian Subscriptions: Canada Post Agreement No. 40038201. Send change of address information to PO Box 881, Station Main, Markham, ON L3P 8M6.
Periodicals Postage Paid at Des Moines, IA and at additional offices. USPS/Perry-Judd's Heartland Division Automatable Poly.
Postmaster: Send change of address to *Woodsmith*, Box 37112, Boone, IA 50037-2112.
Subscription Questions? Write to *Woodsmith*, P.O. Box 842, Des Moines, IA 50304 or call 1-800-333-5075, 8:00 am to 5:00 pm, Central Time, weekdays. Or send an email to: orders@woodsmith.com
Email: woodsmith@woodsmith.com
World Wide Web: http://www.Woodsmith.com

Online Customer Service.
www.Woodsmith.com
- Access your account
- Check a subscription payment
- Tell us if you've missed an issue
- Change your mailing or email address
- Renew your subscription
- Pay your bill

Email: woodsmith@woodsmith.com
Write to *Woodsmith*, P.O. Box 842, Des Moines, IA 50304-9961 or call 1-800-333-5075, 8:00 am to 5:00 pm, Central Time, weekdays. Or send an email to:

AUGUST HOME PUBLISHING COMPANY

Printed in U.S.A.

buying veneer
What You Need to Know

Buying veneer is easier than you think. The secret is knowing what to expect *before* you order.

When it came to building the tip and turn table on page 30, I knew that I wanted to use a veneer that would give the top a special look. So, I decided to order from a specialty veneer dealer. But what I didn't realize was how many questions I would be asked when I called in my order for the veneer.

Well, it didn't take long for me to understand why the dealer had so many questions for me. Each of the questions is important. Because after gathering information about my project, the veneer specialist goes through their inventory and hand-picks what I'll need. That was a service I hadn't expected.

First, it's important to have the measurements of the area to be covered with veneer ready. Then your specialist can help you find enough veneer to insure adequate coverage and a good match for your entire project.

You'll next need to give some thought to the type of veneer you want to work with. I was surprised at how many options I had to consider. Your first decision is whether to work with raw veneer or backed veneer. I chose to go with raw veneer for the table top.

RAW VENEER

Raw veneer requires the most time and equipment to work with but it also gives you some of the most beautiful results.

You'll have the option of choosing from crotches, burls, figures, and beautiful exotic woods. The raw mahogany crotch veneer that I picked for the tip and turn table is a great example.

One of the things you'll soon discover is that dealer availability of different veneers can vary from day to day. So, if you can't find what you want, check with another vendor or call back in a few days.

Because raw veneer is a single thickness (1-ply) you'll receive it in a flat package. It'll often arrive wrinkled, with splits, or even holes in it. Some orders will come to you with nicely trimmed edges and others may come to you a bit ragged. Burls and crotches are oddly shaped so they may arrive in a variety of lengths.

You can order raw veneer in various sheet sizes. But as shown in the above illustration, don't count on all of the area being usable.

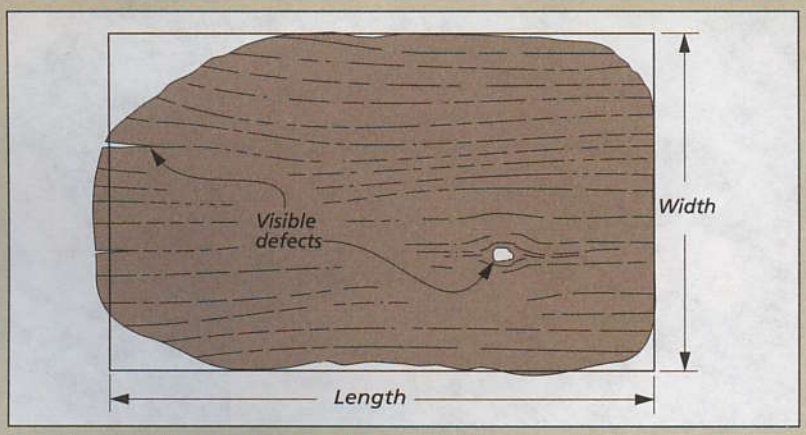

Raw Veneer. *Always order more than you think you need. The variety of shapes and small defects may not give you a standard sheet size.*

BACKED VENEERS

If raw veneer isn't for you, there's plenty of great-looking backed veneers available. They're easy to use and will save you some time.

Backed veneers are constructed of a face veneer with a second material on the back to give it strength and to help it to lie flat. You'll find them a bit easier to use because of this backing. But you're not likely to find as many crotches or burls to choose from.

CROSSBANDING. As shown in the illustration, a face veneer is backed with a less expensive wood species that is aligned 90° to the grain for extra strength. It's a lot like working with a very thin 2-ply plywood that comes in a roll.

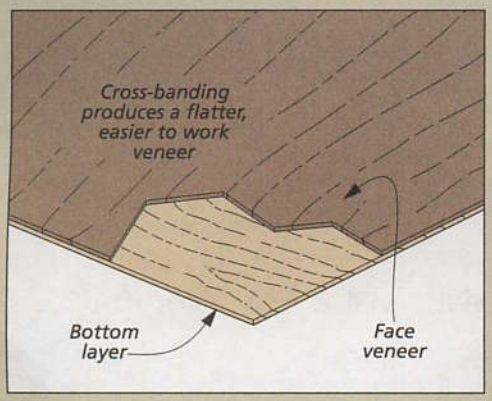

Crossbanded Veneer. *The face veneer is bonded at 90° to a less expensive species. Bonding at 90° gives it added strength.*

PAPER-BACKED. The paper-backed veneer has a paper layer bonded to the veneer. You'll receive it with few if any defects because the vending company does the cutting, fitting, and patching before it's shipped to you. The backing adds strength but the veneer itself you will find is quite thin.

Paper-backed veneer is easy to find in a number of wood species. You can order it in rolls that are 18" to 48" wide and 8' long or longer.

So, you see the key to successfully buying veneer is to know what your want. Then you'll find dealers eager to help you.

SPECIALTY VENEER DEALERS

Certainly Wood
716-655-0206
certainlywood.com

Bob Morgan Woodworking Supplies
502-225-5855
morganwood.com

Easy Veneering: Adhesive-Backed

One of the easiest veneers you can work with is the adhesive-backed veneers or as most people refer to them — "Peel-and-Stick" veneers. When you use these veneers you won't need to have any special tools, equipment, or skills to achieve professional-looking results.

One of the great time savers is that you can cut this veneer to size and shape with just a pair of scissors or a razor blade.

You'll find peel-and-stick veneer in a variety of wood species. They can be ordered in 16"-wide sheets in lengths of 24", 48", and 96". Edging strips are also available in 8' rolls of 1", $1^1/_2$", and 2" widths.

When it comes to applying this veneer, you'll find that it's almost foolproof. Just peel off the release paper on the back of the veneer and then stick it down on any clean dust-free surface (photo at right).

But be aware. Adhesive-backed veneers sometimes don't stick well to bare wood surfaces. So, you'll want to finish the bare wood with a couple of coats of paint or varnish before you apply the veneer to your project surface.

Using peel-and-stick veneers is simple. All you need is a few basic tools and they look great.

▲ *When you peel off the paper on the back of the veneer you'll find adhesive material bonded to the back of the face veneer. Then carefully place the veneer on the prepared surface and press it in place.*

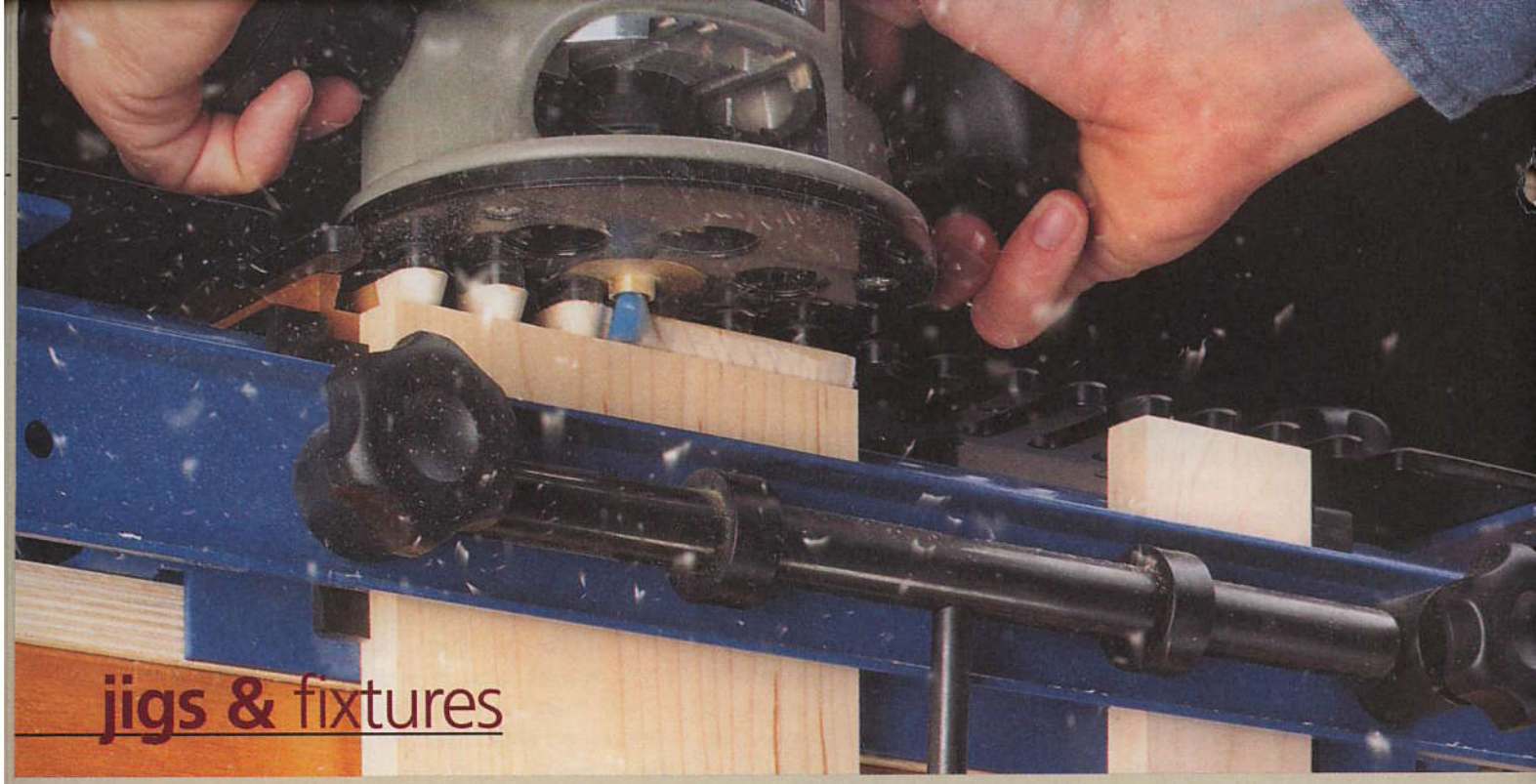

learn the secrets to **Routing Dovetails**

A half-blind dovetail jig makes it easy. And with just a few simple tips, you'll be routing perfect joints in no time.

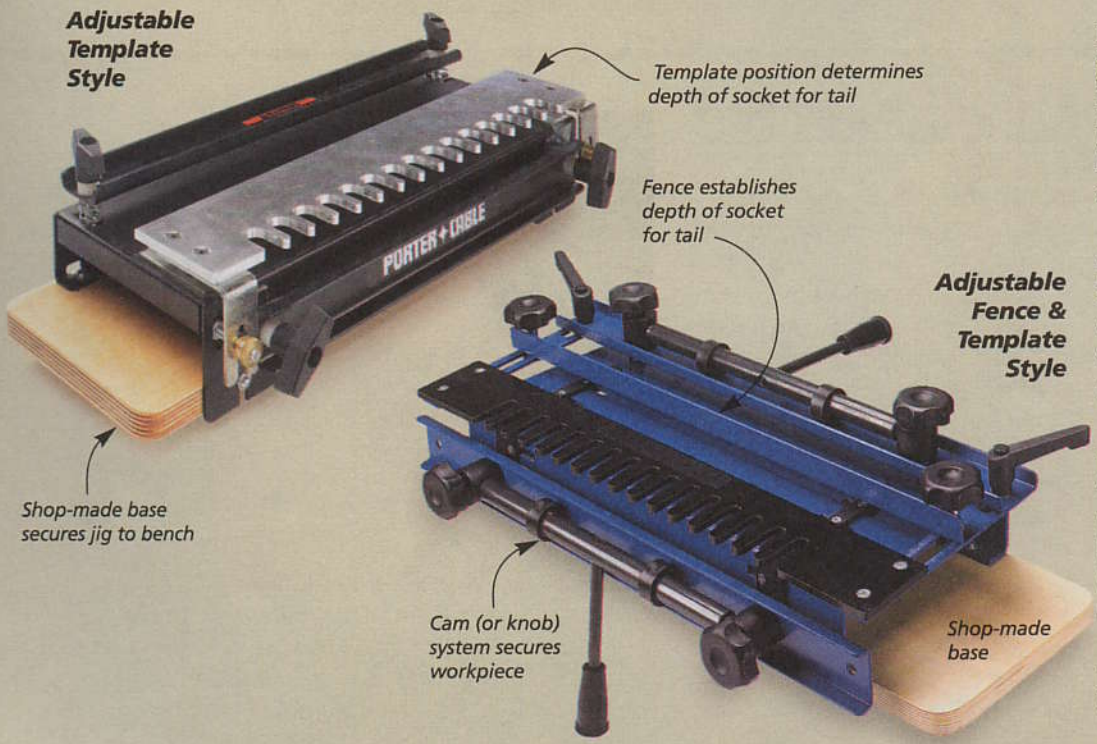

It's hard to think of a woodworking joint you can cut faster than a half-blind dovetail — both parts of the joint are cut at the same time with a hand-held router and a half-blind dovetail jig (photo above).

The real challenge is setting up a dovetail jig so that routing the joint is fast, easy, and accurate. And doing that depends on the style of dovetail jig you have (or might be thinking about getting).

A TALE OF TWO JIGS. Page through a number of woodworking catalogs and it might seem like there are over a dozen different dovetail jigs. But if you look closely, you'll notice that most of them resemble one of the half-blind dovetail jigs at left.

What's the difference? On the jig at the far left, the depth of the socket that accepts the tail is

established when a bushing reaches the end of the slot on the template. On the other jig, the base of the router contacts an adjustable fence to limit the cutting depth. The bushing simply guides the router in and out of the template slots.

I know this doesn't sound like much of a difference. But to be honest, the dovetail jig with the fence took me a little longer to "tweak" before I was able to rout perfect half-blind dovetails.

THE TEMPLATE. Another difference worth mentioning is the template that comes with the jig. A jig with a metal template will probably be more expensive (around $100). While a jig with the plastic template can be found for $50.

I prefer a metal template since it's less likely to sag. As you're routing, it just feels more secure. To provide solid support on the plastic template, I had to slip a scrap piece in place to support the opposite end. You can see this in the main photo on the opposite page. Note: A couple scrap pieces are a good idea with either jig since they allow the clamp bars to hold the workpieces more securely.

A more important consideration regarding the template is how it controls the spacing of the dovetails. Most templates are designed to cut $1/2$"-wide dovetails spaced $7/8$" apart. Other jigs space the dovetails 1" or $1\,1/8$" apart. (We use the $7/8$" spacing for *Woodsmith* projects.)

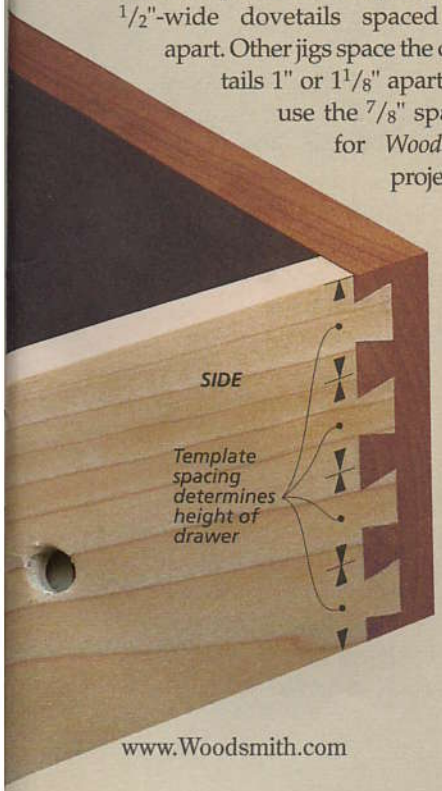

Why is that important? The spacing determines the width (height) of the drawers. The drawer heights should be a multiple of the spacing. This way, you'll be sure to end up with a joint that's symmetrical — a perfect half-pin on both the top and the bottom, as in the photo below.

SETTING UP THE JIG. There are a few key steps you'll need to be concerned with when you initially set up a half-blind dovetail jig. You can see how I did this for a dovetail jig with a fence in the How-To at right.

Note: When you're making a drawer or box, half the joints are cut on the left side of the jig and half are cut on the right. So you'll need to repeat the setup for the stop at the other end of the jig once you've completed the initial setup.

The process for setting up the other dovetail jig is virtually identical. Since there's no fence, the template simply has to be positioned according to the instructions that come with the jig. Most often this is just a matter of measuring from the back of a template slot to the end of the upper workpiece.

JIG INSTRUCTIONS. There is one thing to mention about the instructions that come with some of the fence-style dovetail jigs. While the jigs work great once they're set up, I felt that the instructions that came with the dovetail jig weren't as clear as I thought they could be.

It's always best to think through each step of the process and do a little "common-sense check" before making any changes. And always make a "dry run" with the router off before actually routing any workpieces. This way, you won't inadvertently cut into the workpiece, template, or jig. (Believe me, it's easy to do.)

CUTTING DEPTH. Finally, the last thing to do before making any test cuts is to install the bushing and dovetail bit recommended by the manufacturer. For the depth of cut, most manufacturers suggest an initial setting around $1/2$" to $9/16$". I've found that to be a good starting point.

How-To: Set Up the Jig

***Position Side**. For a symmetrical dovetail layout, position the side of the drawer so the edges are centered in the open slots of the template.*

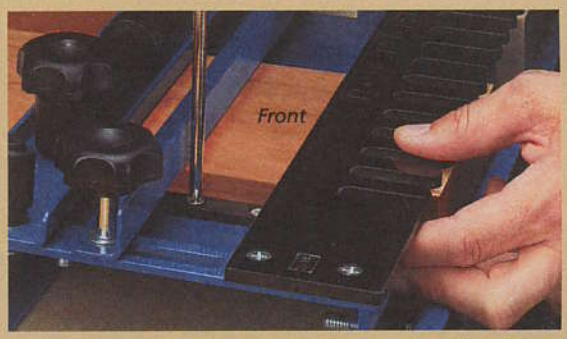

***Set the Stop.** Next, slide the stop against the drawer side and lock it in place. Then, adjust the drawer front as required so it's also tight against the stop.*

***Set the Template.** Here the template is positioned slightly back ($1/16$") from the face of the drawer side. A rabbeted set-up block makes this quick and accurate.*

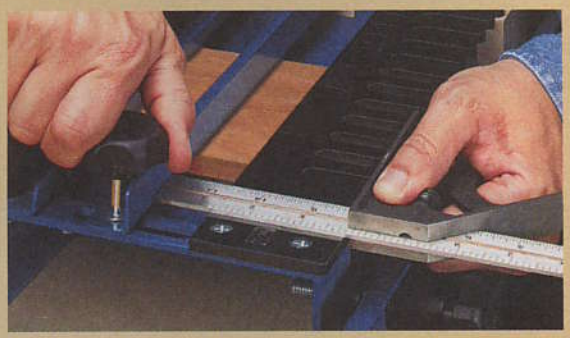

***Position Fence.** After a little math calculation (per the jig instructions), set both ends of the fence using a combination square to ensure the fence is parallel.*

routing the DOVETAILS

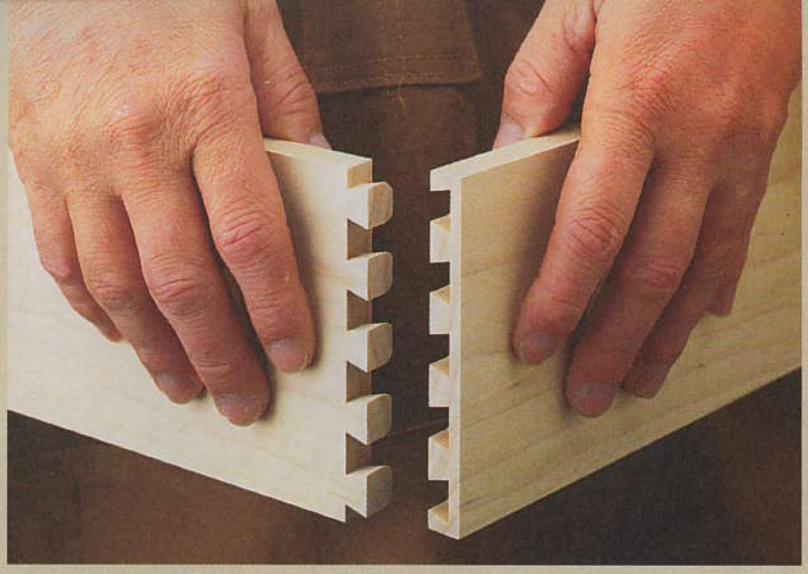

Checking the Fit. *With a perfect-fitting dovetail, you should be able to slide the pieces together halfway by hand and then tap them home with a mallet.*

Now that the jig settings are "in the ballpark," you're ready to start making some test cuts and tweaking the settings one by one to get a perfect fit.

TEST CUTS. The template may control the spacing of the dovetails, but the settings you've made are what really control the fit of the joint.

The fit probably won't be perfect the first time, so it's best to practice on test pieces before you rout your actual workpieces. The test pieces should be the same width and thickness as your drawer pieces. (You can use them several times by just cutting off the ends.) Once you get a perfect fit, then you can rout the dovetails in the actual workpieces.

With the test pieces clamped in place, the first step is to minimize any chipout by making a *light* scoring pass from right to left, as in Figure 1. I know. It's not usually a good idea to rout in this direction (backrouting), but since you're making a light pass, it's okay.

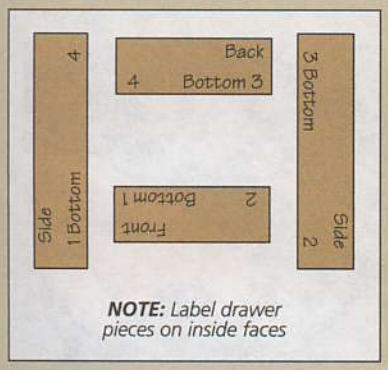

NOTE: *Label drawer pieces on inside faces*

After the initial scoring pass, you can rout the tails by moving the router in and out of the slots in the template, working from left to right (Figure 2). Before removing the pieces from the jig, make sure that every pin and socket is routed cleanly. You can remove the template to check this.

Next, remove the test pieces and see how they fit (photo above). Don't worry if the fit isn't perfect on the first try. It rarely is. To see how to get everything just right, check out the tips in the box below.

Once you have a good fit, you're ready to rout the actual workpieces. The only thing to worry about is keeping all the drawer pieces organized as you do this. To help keep things straight, I like to label all my pieces like you see in the drawing at left.

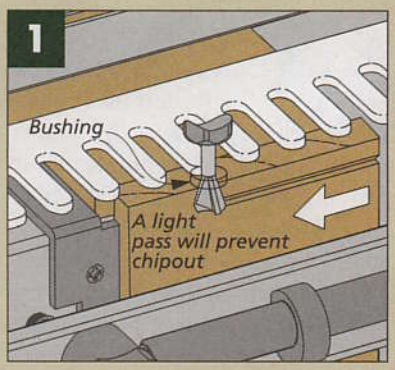

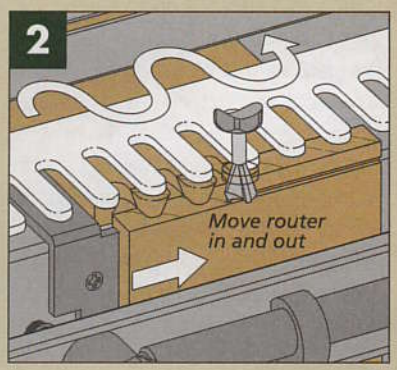

Troubleshooting: Tips for Getting a Perfect Fit

Setting up to rout machine-cut dovetails is always a trial and error task. So don't be surprised if you have to spend a little time adjusting the jig to get a perfect fit. A few of the "problems" you might run into are shown in the drawings at right. As you make adjustments, it's best to make a small change to one setting and make another test cut. Then move on once you have that just right.

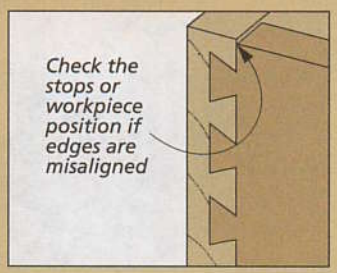

Offset Edges. *If the top and bottom edges don't align, the workpieces may not have been tight against the stops.*

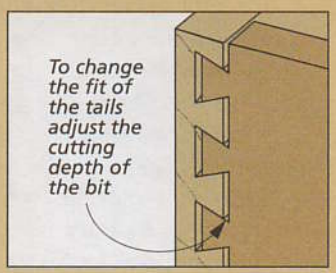

Loose Fit. *If the joint is too loose, increase the depth of cut.* ***Tight Fit.*** *If the joint is too tight, decrease the depth of cut.*

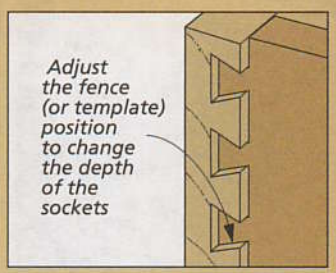

Too Deep. *If the tails go too deep move the fence forward.* ***Too Shallow.*** *If the tails are proud, move the fence back.*

D. An adjustable support bar keeps the router more stable and perfectly level, yet flips out of the way when it's not needed.

A. Setting the stop to offset the workpiece is fast and easy with access right up front.

B. A bearing-guided bit provides smooth movement as you work in and out of the template.

C. Clamps slide right next to the workpiece for solid support, like the optional Kamtite clamps shown here.

a cut above with the WOODHAVEN DOVETAIL JIG

I mentioned earlier that there are two basic styles of half-blind dovetail jigs. Well, that's not exactly true. There's another one that's in a class all by itself. And that's the *Woodhaven Dovetail Jig* shown above.

The *Woodhaven* jig is one of the best and easiest half-blind dovetail jigs I've ever used. I was able to get a perfect half-blind dovetail joint after making only two test cuts.

TEMPLATE. The $^3/_4$"-thick phenolic template features two different dovetail spacings. Besides the $^7/_8$" spacing that I use most often, the opposite side of the template allows you to cut $^3/_4$"-wide dovetails spaced $1^1/_2$" apart — an almost hand-cut look.

ROUTER BIT. Instead of using a bushing in your router base to guide the bit around the template, the bit provided with the kit has a top-mounted bearing. The bearing provides a very smooth action as you follow the template.

CLAMPING. The clamping mechanism on the *Woodhaven* feels more secure than any other I've used. That's because the phenolic clamp bars are slotted, allowing you to position the clamp knobs (or optional *Kamtite* clamps shown above) right next to the workpiece.

ROUTER SUPPORT BAR. You'll also feel more secure as you rout the workpieces. That's because *Woodhaven* added a router support bar that flips down when you need it and out of the way when you don't.

ALTERNATE OPERATION. A feature unique to this jig is that you can use it on your router table. Simply reassemble the top clamp bar to flip the knobs "inside."

OPTIONAL TEMPLATES. Optional templates expand the capability of the *Woodhaven* jig further. There's a second template that allows you to cut $^1/_4$" or $^3/_8$" half-blind dovetails. Another template allows you to cut $^1/_2$" or $^3/_4$" box joints. Finally, through dovetails are possible with the *Keller* Dovetail Kit.

Although all this versatility and capability comes at a price, it's a perfect example of getting what you pay for. The basic jig starts at $190. Other kit combinations are available, including The Works Kit that includes all the different templates and router bits for $470. For sources, refer to page 49. W

learning the basics of Working with Glass

Working with glass doesn't have to be a shattering experience. Here's a crash course on everything you need to know.

Whether it's for a picture frame, a glass panel for a cabinet door, or just replacing a broken window, sooner or later, you'll probably be faced with the task of cutting a piece of glass. Fortunately, this isn't difficult. In fact, working with glass is actually kind of fun once you learn the basics.

TOOLS. The tools you need to cut glass aren't very complicated or expensive. To start with, you'll need a glass cutter. This tool is a bit like a miniature pizza cutter. It has a tiny, steel cutting wheel at one end to score the glass. (Glass cutters typically cost less than $5 at most hardware stores).

Along with the glass cutter, you'll need a straightedge to help guide the cutter and some oil to keep the cutting wheel lubricated. You'll also need a pair of leather gloves to protect your hands from the sharp edges of the glass. And some safety glasses to shield your eyes from any small shards of flying glass.

If you're going to be cutting a lot of glass, there are some other tools you might want to consider buying (see box on opposite page). But these aren't absolutely necessary.

HOW IT WORKS. Technically speaking, you don't really "cut" glass. Rather, you score a shallow line across the surface of the glass. Then you apply pressure to the glass until it fractures or "runs" along the score line. These two steps — scoring and running — are all there is to cutting glass.

You can safely cut standard flat glass up to about $^1/_8$" thick. But if your project calls for tempered

glass, safety glass, or thick plate glass, you'll need to call on the services of a glass shop.

PREPARATION. Before getting started, make sure your glass is clean. Any dirt or grit will stop the wheel of the glass cutter like a skateboard on gravel. Then set the glass on top of your workbench with a mat or some newspaper underneath it to act as a cushion.

SCORING. To score the line, hold the glass cutter in your hand with your index finger on top of the cutter. Dip the cutting wheel in the oil to lubricate it. Now using the straightedge as a guide, start at the top of the glass and draw the cutter toward you. Keep the cutter moving until it runs off the bottom edge of the glass. Try not to stop in the middle and don't retrace the score or the glass will break unevenly.

The real secret to successful scoring is the amount of pressure you use. Too little pressure and the score line won't be deep enough, making it hard to break the glass cleanly. Too much pressure and you can end up with tiny chips all along the score line, or you may even wind up cracking the glass. Try practicing on some scrap pieces of glass to get a feel for how much pressure to use.

RUNNING. Once you've scored the glass, the next step is to "run" the score and snap the glass in two. Wearing a pair of leather gloves, simply grasp the glass along the edge on each side of the score line and give both sides a quick, downward jerk, as if you were snapping a twig. The glass should break cleanly in two pieces, right along the score line (see inset photo above).

If you have difficulty running the score, try gently tapping the back of the score line with the round end of the glass cutter. This will help deepen the score and make it easier to break the glass.

◄ Use a glass cutter and a straightedge to score a line on the glass. Then break the glass by snapping it along the score line.

CLEAN UP THE EDGES. Once you've cut the glass, it's a good idea to smooth out the rough edges with some cloth-backed, silicon-carbide sandpaper. (For safety's sake, don't hold the sandpaper in your hand — use a sanding block.) W

How To: Tools of the Trade

A hardware store glass cutter is all you need for cutting an occasional piece of glass. But if you do a lot of glass cutting, you might want to invest in some other tools.

For around $25, you can get a professional glass cutter with a carbide cutting wheel. As you press down on the cutter to score the glass, a small amount of oil is automatically ejected from a reservoir in the handle to lubricate the wheel. Special pliers are also available to help with breaking the glass cleanly. See page 49 for sources.

Cutters. *A standard glass cutter (top) can be found at most hardware stores. But for a little more, you can buy a cutter with a carbide wheel (bottom).*

Running Pliers. *To help break the glass after you've scored it, a pair of running pliers is used to apply pressure on each side of the score line.*

Breaking Pliers. *A pair of breaking pliers can be used to "nibble" away narrow pieces of glass that are too small to break off by hand.*

no-miter Picture Frames

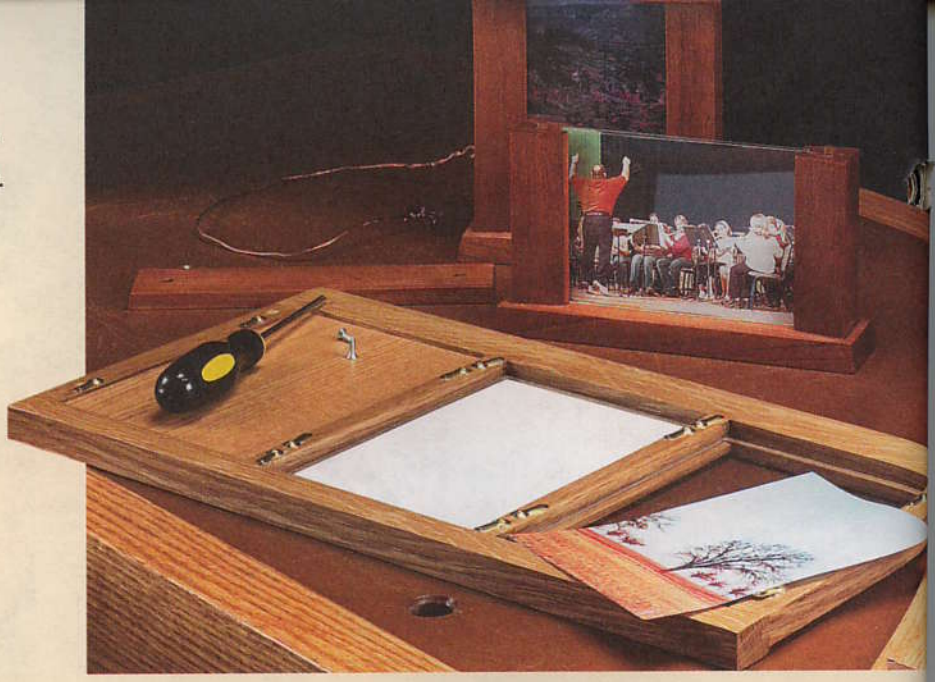

These simple frames feature basic joinery, which means you can build a bunch of them in a short time and they won't take a lot of material.

Sometimes a quick and easy project can be just as enjoyable to build as one that's large and complicated. Maybe it's because you can make something that looks good without a huge investment in time or materials. That's the case with the picture frames you see in the photo above. In fact, you can make several of them in a weekend. You should be able to find plenty of material for making each one in your scrap box.

And you don't have to worry about miters. Leaving out the miters doesn't mean there isn't anything interesting about these frames. To build them, I chose some basic woodworking joinery techniques (with a few twists) — tongue and groove and dowels.

There's one other feature of these frames that I think you'll like. They all have unique ways to easily swap out the photos.

tongue & groove TRI-FRAME

The frame shown in the photo at left has a few interesting details that make it stand out. For one, it holds three 5" x 7" photos. You'll also notice that the bottom rail is slightly wider than the top rail, which gives the frame a window-like look. Finally, the stiles and rails aren't the same thickness. This gives you a chance to try some offset joinery.

To build the frame, start by cutting the *rails (A, B)* and *stiles (C, D)* to size, as shown in the drawing on the opposite page.

CHAMFER DETAIL. Before cutting the joinery on the frame parts, there's

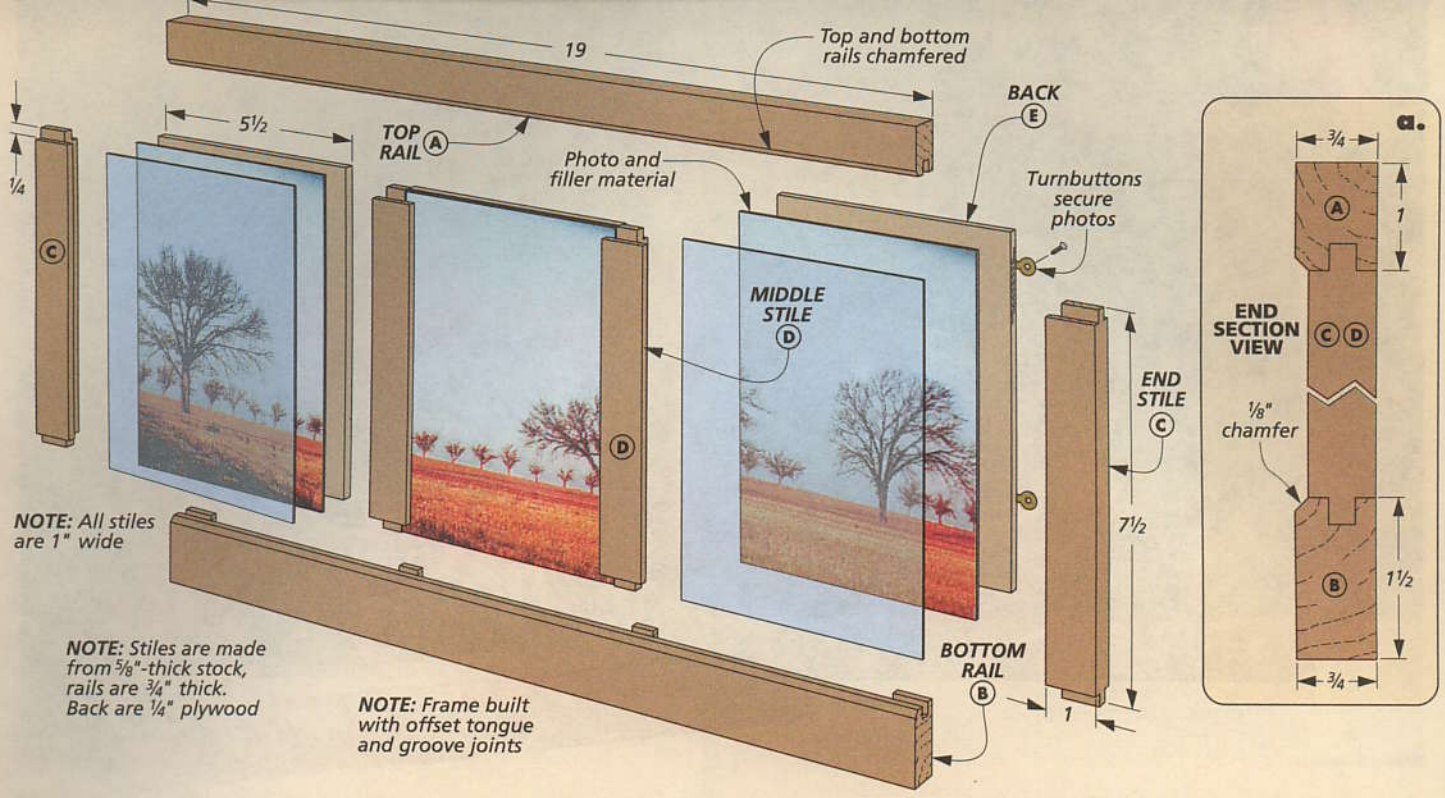

one detail added to the rails. I routed a chamfer on the front inside edges of the top and bottom rails. This softens the transition between the rails and stiles.

OFFSET TONGUE AND GROOVE. The frame parts are assembled with tongue and groove joints. Because the rails are thicker than the stiles, you'll need to make the grooves in the rails off center so that the stiles and rails are flush in the back. You can learn more about how I cut the joinery, using a dado blade in the table saw, in the box below.

After the grooves are cut in the rails, you can now cut matching tongues on the four stiles (center box below) and glue the frame together. The tongues are centered on the stiles so that they will end up flush in the back.

ROUT RABBET FOR GLASS PANE. In order for the frame to hold photos, you'll need to make room for the glass to fit in the frame. To do that, I routed a deep rabbet in the back of each opening, as illustrated in the right drawing below.

Since the bit won't be able to reach into the corners of the frames, I went back and squared up the corners with a chisel.

ATTACHING THE BACK. After the rabbets are complete, you can cut the plywood *backs (E)* to fit each recess.

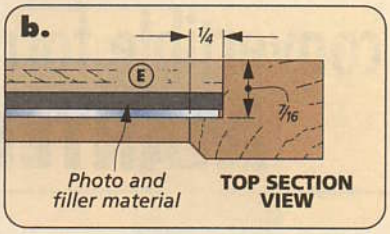

To keep the glass, photo, and back in place, I screwed metal turnbuttons on the back side of the frame. You can then have glass cut to fit the frame or do it yourself. For some tips on working with glass, turn to the article on page 14.

To mount the frame to the wall, I attached a pair of D-rings and some wire to the frame.

How-To: Frame Details

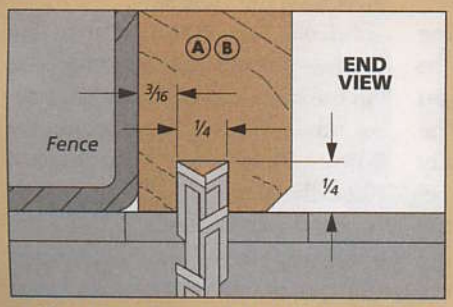

Offset Grooves. *Cut the grooves in the rails after routing a chamfer. The grooves in the rails are offset so that the stiles and rails will end up flush.*

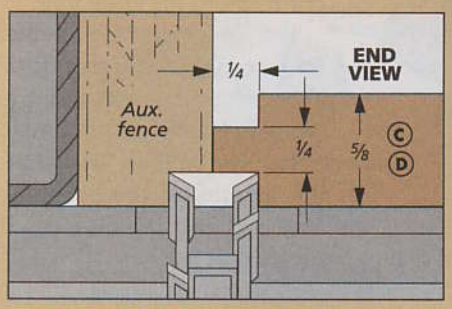

Centered Tongues. *After cutting the grooves, the tongues can be cut on the stiles. Flip the workpiece after the first cut to center the tongue.*

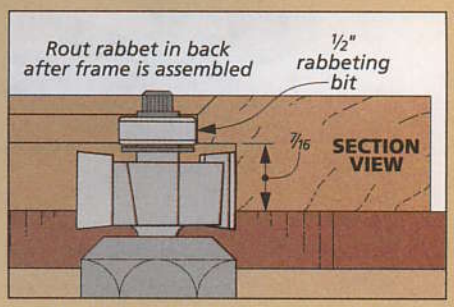

Rabbet the Back. *Rout a rabbet in the back of the frame (in several passes) to create a place for the glass, photo, and back to sit.*

convertible format
MANTEL FRAME

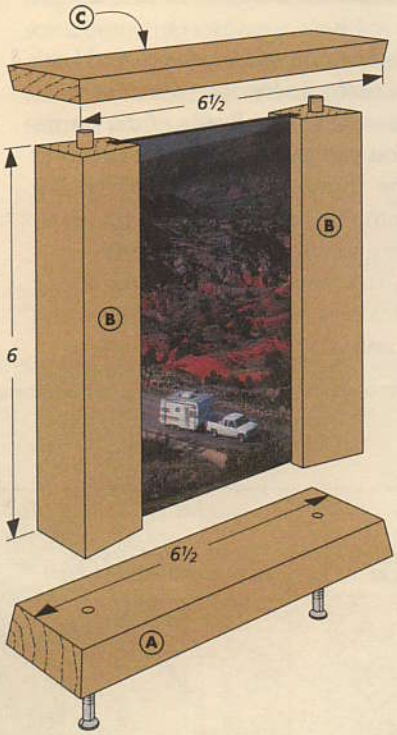

▲ You'll find it's pretty easy to change the horizontal frame to a vertical frame. All you need to do is change a few dimensions. The top and bottom pieces are shortened and the sides are lengthened.

What makes this mantel frame unique is its ability to stand on its own. Most free-standing frames like this are really just wall frames with a wobbly, hinged flap to hold it up. This frame rests on a solid base. And a removable top makes it easy to get at the picture inside.

TWO FRAMES IN ONE. But these frames have a couple of other features that are worth mentioning. First, these frames don't have a solid back. Because there's a glass pane in the front and the back, you can actually display two photos in one frame at the same time.

The other feature is that the frame can be easily modified to be either vertical or horizontal, as you can see in the photo above. The details for both are the same, only the lengths of the parts change. You can find the changes in the drawing at left.

I started building this frame from the bottom up. The *bottom (A)* is simply a piece of $^5/_8$"-thick stock cut to size with a slight (10°) bevel cut on all four edges.

Safety Note: Since the size of the parts are so small, I did most of the shaping of the bottom, sides, and top on extra-long blanks.

MAKING THE SIDES. Next, I made the *sides (B)*. They have two details cut in them. First, a groove to hold the pictures. Second, bevels to match the bottom and top (made later).

The first step in making the sides is to cut the centered groove. I sized the groove to hold two pieces of glass and two photos, as you can see in detail 'a' on the opposite page. The groove is cut in two passes on the table saw.

CUTTING THE BEVELS. Once the grooves are cut, the next step is to cut the bevels on each face. You can see how I did this in the box on the bottom of the opposite page. I tilted the saw blade 10° and crept up on the final fence setting. The blade just shaves the top corner of the blank without leaving a flat spot on the edge. Then you can flip the workpiece around and cut the other side. The sides can then be cut to final length.

The last piece to make is the removable *top (C)*. It shares the same bevel detailing as the bottom. The only difference is that the top is 3/8" thick, as shown in detail 'b.'

ASSEMBLING THE FRAME. With all the parts made, you can now assemble them into the frame. I used two different methods for joining the top and bottom to the sides, as shown in the box below.

To secure the bottom, I simply used screws. The reason for this is the joint here is end grain, which makes a poor glue joint. I started by marking and drilling shank holes in the bottom. Next, I attached the sides to the bottom with some carpet tape and marked the screw holes with a brad point bit (center drawing). Then remove the sides and drill the pilot holes for the screws. The dimples left by the brad point bit will also keep the bit from wandering.

ADDING THE TOP. For the top, it needed to be easily removed to get at the photos inside. To do that, I attached it with dowels. A pair of dowels is glued in the frame sides. A pair of holes in the top fit over the dowels and keep it in place.

The first step is to mark and drill holes in the sides. Then I used dowel centers to mark the location for the holes in the top. Finally, you can glue short pieces of dowel in the sides (detail 'b') and the frame is ready for pictures. W

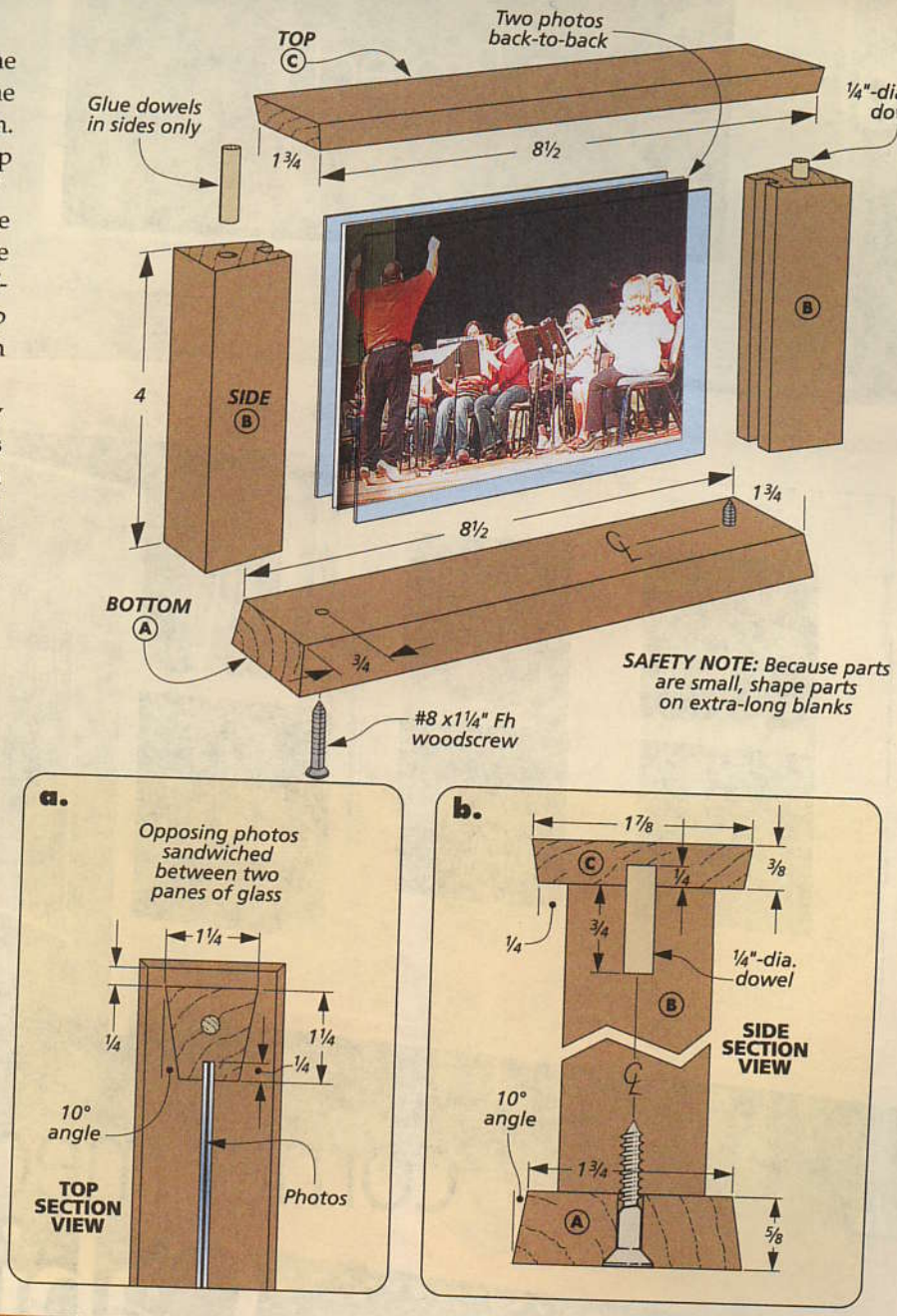

How-To: Assembly Details

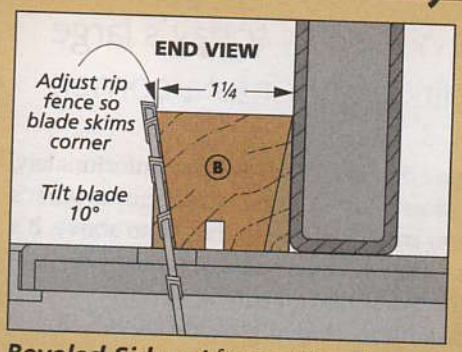

Beveled Sides. *After cutting the centered groove, cut the beveled sides. Sneak up on the fence setting so that the blade just grazes the corner.*

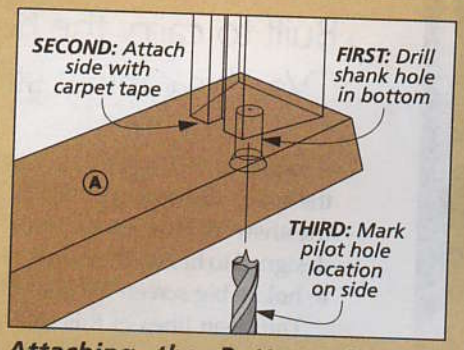

Attaching the Bottom. *Start by drilling a shank hole in the bottom. Then use a brad point bit to mark the pilot hole location in the sides.*

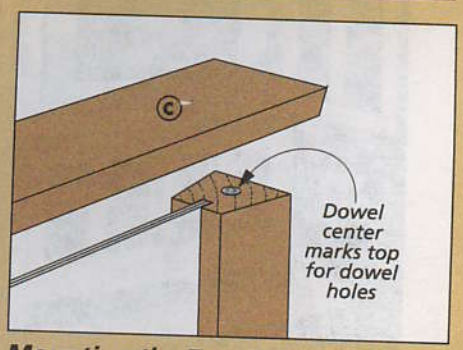

Mounting the Top. *To attach the top, drill holes in the sides to hold dowels. Then use dowel centers to mark the top for matching holes.*

corner media Cabinet

▲ The separate upper cabinet is built using the same joinery and techniques. And it simply rests on the lower cabinet.

Built to carry the heavy load of today's large TVs, this cabinet still fits neatly into a corner.

It seems to me that TVs are getting bigger by the day. But unfortunately, the space we have to put them in doesn't grow along with them. So what's the answer? How about the corner media cabinet in the photo above. It's designed to fit into the corner of a room while still giving you plenty of space to hold a big screen TV and all the extras that go with it.

The clean lines of this cabinet, with its reeded glass doors and simple hardware, make it a standout piece on its own. But then adding the optional upper cabinet you see in the photo at left gives you a slightly different look. And that's not all. If you prefer a traditional style cabinet with turned legs and panel doors, check out Designer's Notebook on page 27.

Simple beveled top trim

Top Center Panel

NOTE: Optional top cabinet may be added, see page 26

NOTE: Door frames are constructed with mortise and tenon joints

Cutout in back panel allows easy access

No-mortise hinge

Glass stop

Case side

Face frame stile

Brushed aluminum pulls

NOTE: Case is constructed of ¾" plywood

Skirt filler

NOTE: Reeded glass installed in rabbet in door frames

Base trim supports legs

CONSTRUCTION DETAILS

OVERALL DIMENSIONS: 46"W x 29½"D x 28¼"H

Brushed aluminum legs are adjustable

NOTE: Doors are installed flush with face frame

LOWER FRONT CORNER DETAIL

NOTE: Traditional style option on page 27 features turned legs and solid panel doors

NOTE: See page 49 for sources of hardware

Face frame joined with mortise and tenon

Tongue and dado joins case sides to case top and bottom

UPPER BACK CORNER DETAIL

Top border

Beveled top trim

Hardboard spline connects top center panel and top border

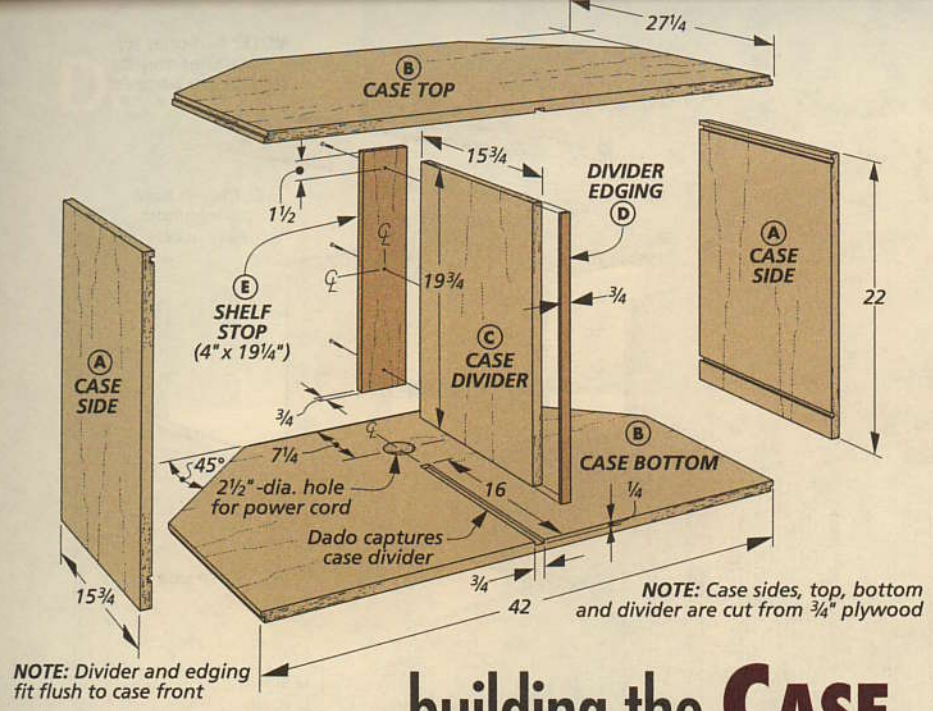

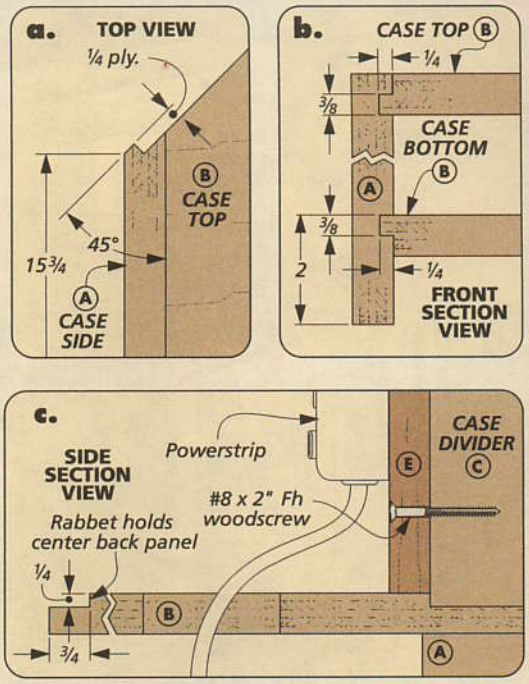

building the CASE

The TV I had in mind to sit on this cabinet was pretty hefty, so I wanted to make sure the case was up to the task. I decided on ¾" plywood for the case parts with some simple but solid joinery to connect them.

GETTING STARTED. If you take a look above, you'll see that the footprint of the case is just a rectangle with the two back corners angled at 45°. There's really nothing difficult about creating this shape, it just takes the right approach. And for me, this started with making the two *case sides (A)*. Once these are in hand, you can simply use their beveled back edges to show you where to cut the corners off of the top and bottom panels.

A BEVELED RABBET. After cutting the bevel on the back edges of the sides, you'll want to stay at the table saw for the next task. A look at detail 'a' shows how the beveled back edges of the sides are rabbeted to hold the ¼" plywood back side panels. This beveled rabbet allows the back side panel to follow the shape of the case. The box below gives you the step-by-step.

TONGUE AND DADO. This case calls for some solid joinery and the tongue and dado shown in detail 'b' fills the bill. This joint is both easy to make *and* assemble and will create a very rigid case.

TOP AND BOTTOM. Once the dadoes are cut in the two sides, you can set them aside and move on to the case top and bottom. These two pieces will give the case its unique shape. And fortunately, they're pretty easy to make. You really have two goals here. The first is to get a good fit where the bevel of the side meets the angle of the top and bottom as shown in detail 'a.' Second, you want to get an exact match in

How-To: Cut a Beveled Rabbet

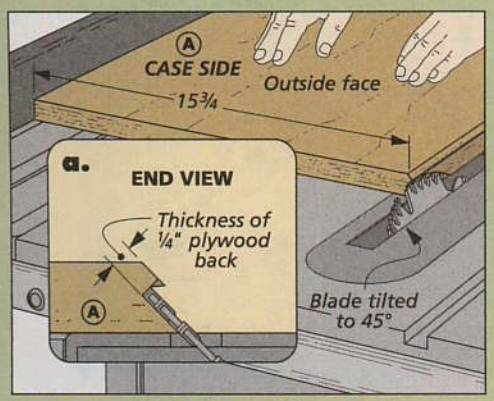

Cut to Depth. *Get started by sneaking up on the depth of the rabbet until it matches the thickness of the plywood back panel.*

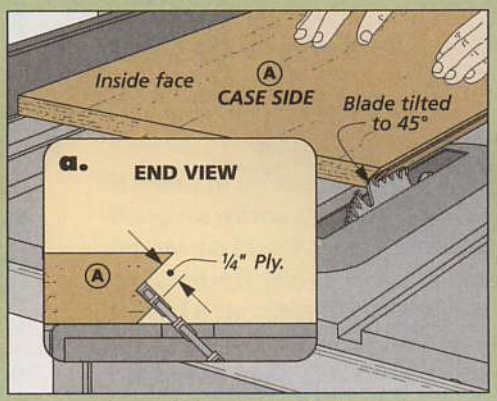

Square the Rabbet. *Now flip the side over to square the rabbet. Readjust the fence and the height of the blade before making the cut.*

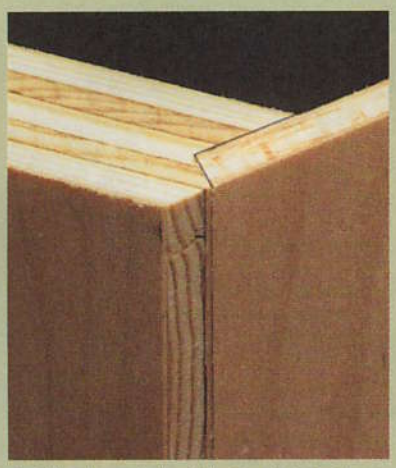

▲ The beveled rabbet cut into the back edge of the two sides captures the side back panels.

the shape of the top and the bottom. If you get these two simple details right, the three back panels should go on without a hitch.

It worked well for me to cut the tongues on the top and bottom panels before I worried about cutting off the corners. This allows you to dry assemble the case and mark right where the top and bottom and the sides should meet. The box below shows you where to take it from there. As the final drawing shows, I cut the bottom to shape and then used it to get a perfect match to the top.

MORE JOINERY. Now you have the two sides and the top and bottom cut to shape and the joinery completed. A couple more tasks and you're ready to begin the assembly.

First, I decided to use a piece of 3/4" plywood captured in a rabbet in the case top and bottom for the center back panel (detail 'a'). This will give the case top some extra support across the back.

Next, you can cut the joinery for a short *case divider (C)* that reinforces the top and also allows you to add a couple of shelves.

ASSEMBLY. Once the dadoes for the divider are cut, you can assemble the case and fit the divider. A hardwood *shelf stop (E)* adds more reinforcement to the case and provides a spot to mount a power strip (detail 'c' on preceding page).

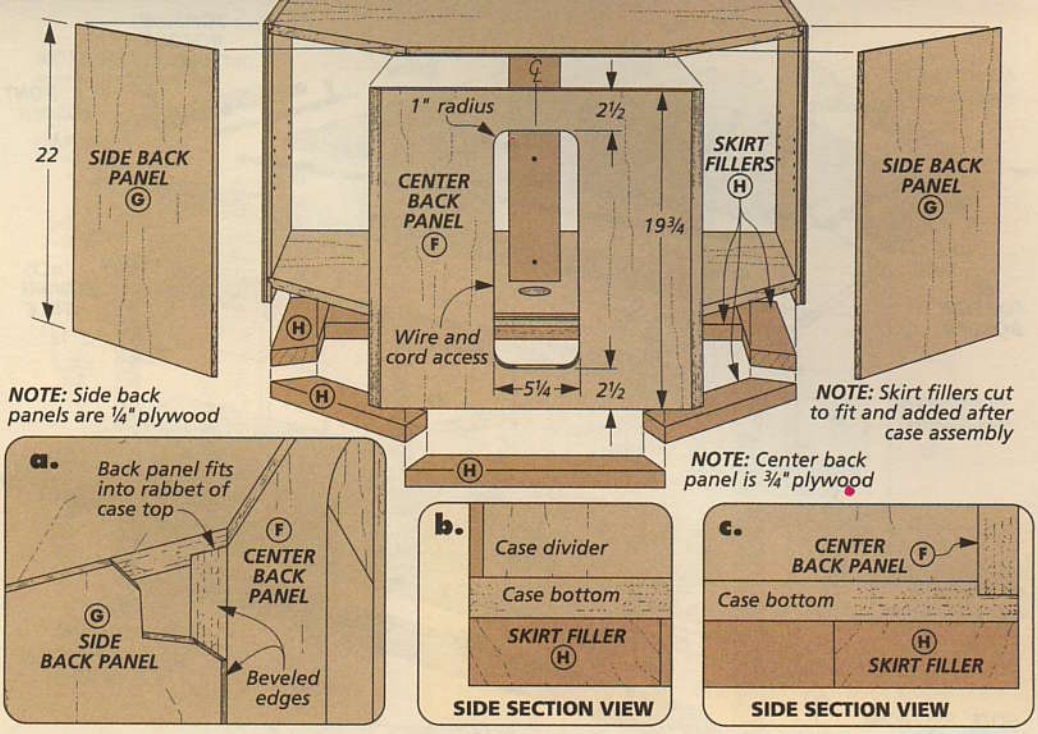

BACK PANELS. After drilling a cord access hole behind the shelf stop, the three back panels are next on the agenda. First comes the 3/4" plywood *center back panel (F)*. A look at detail 'a' above shows how the panel fits into the rabbets in the top and bottom. And before gluing the panel in place I made a large cutout for wires and cords.

The two 1/4" plywood *side back panels (G)* fit into the beveled rabbet you cut in the sides and then lap over the top, bottom, and center back panel (detail 'a'). You'll need to bevel the back edges before gluing and nailing them in place.

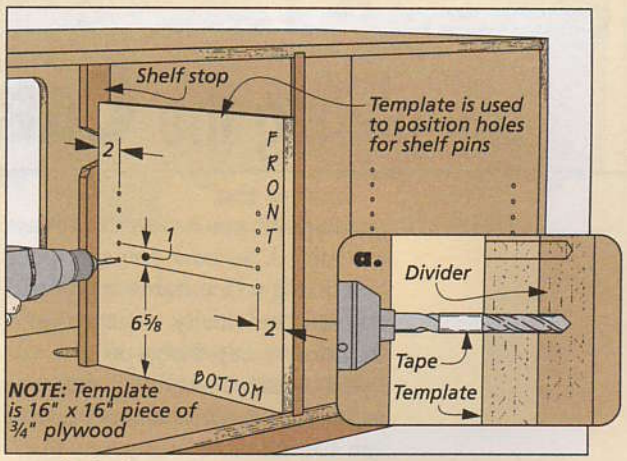

Level Shelves. *To ensure that the shelves sit flat and level on the shelf pins, I used a plywood template to locate and drill the holes.*

Perfect Fit and Match

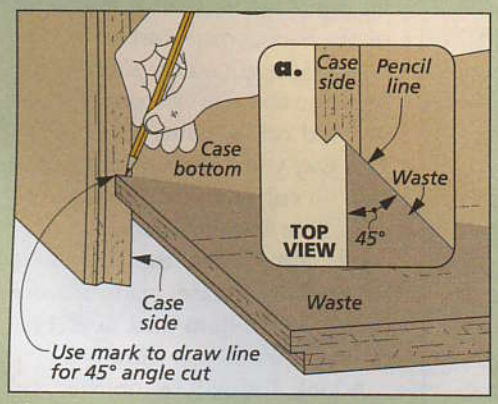

The Corner Cut. *First, mark the start of the 45° cut and then use a combination square to complete the line.*

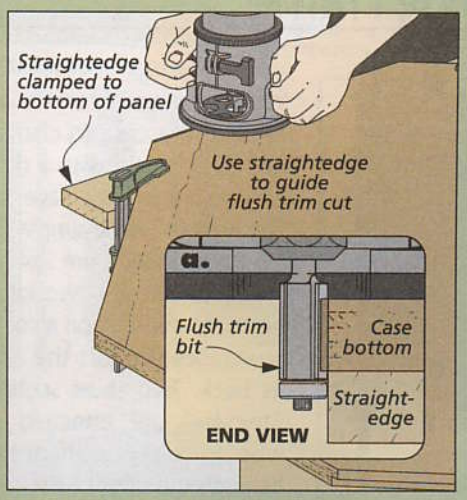

Smooth Trim. *After removing the corners with a jig saw, use a router with a straightedge and flush trim bit to smooth the cut.*

Perfect Match. *Once the bottom is trimmed to size, it can be used to flush trim the top for a perfect match.*

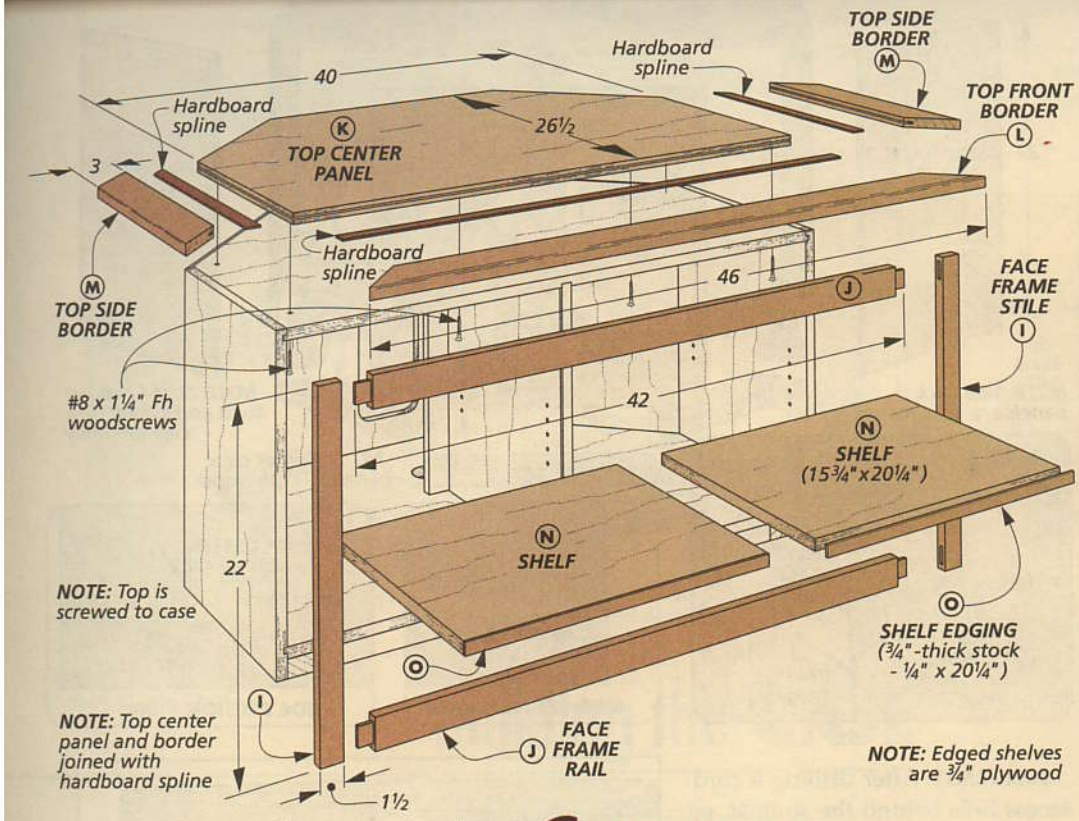

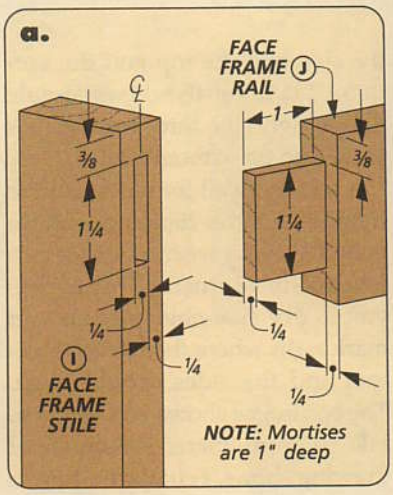

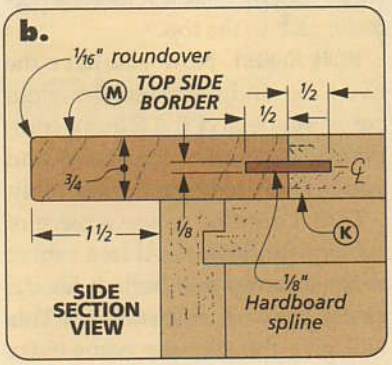

completing the CABINET

At this point, you have a sturdy case assembled. So now you can focus on adding a face frame, a top and shelves. And finally, some trim and the doors to cap things off.

FACE FRAME. First, you want to tackle the face frame. And as you can see above, this is pretty standard construction. The two stiles and the top and the bottom rail are connected with a mortise and tenon (detail 'a'). This solidly joined frame will help make the case a little more rigid.

The real trick to adding the face frame was figuring out how to clamp it to a case without square back corners. But after a little trial and error, I came up with the technique shown in the box below.

Shop Tip: A Clamping Frame

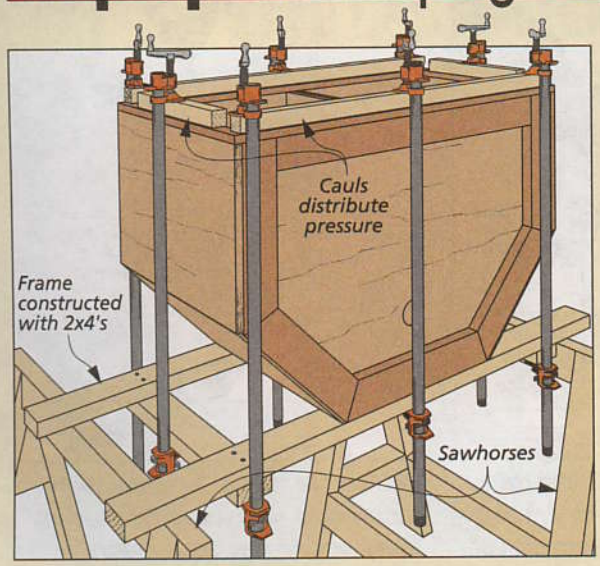

With no square corners at the back of the case to clamp to, I had to come up with a different way to attach the face frame. The answer was a simple clamping frame made from 2x4s.

As you can see, two long sections of "two-by" on a couple of sawhorses support the case on its back. Two short sections of "two-by" are attached crosswise. I positioned them directly beneath the sides of the cabinet. This allows you to apply plenty of clamping pressure when gluing the face frame to the case.

THE TOP. With the face frame successfully glued in place, I started work on adding a top to the cabinet. You can see above that the top is just a ¾" plywood panel with a wide hardwood border attached. It has a pretty fair overhang on the front and sides, but sits flush to the back of the case. And to make the assembly a little easier as well as the joint a little stronger, I joined the top panel and the border with hardboard splines (detail 'b').

I found that it worked best to apply the border pieces to the center panel before cutting the angle on the back corners. Just leave a little extra length on the side border pieces so that you can trim the border and center panel all at once. This way you'll end up with a nice smooth cut and you'll save yourself a little time and work.

THE TRIM. After the top was screwed to the case, next up were the top and bottom trim. First, I set my sights on the top trim.

A look at detail 'a' on the next page gives you the idea. This beveled trim can be made on the table saw. The three pieces are then

mitered to fit and glued in place beneath the top as shown at right.

Once the top trim is in place, you can turn your attention to the simple base trim. It creates a transition between the case and the legs but more importantly, gives the legs a really solid footing. A quick look at detail 'b' shows how the base trim sits 1/4" proud of the case. Again these pieces are just mitered-to-fit and then glued in place.

ADD THE LEGS. With the base trim complete, installing the adjustable legs comes next. Four legs is the usual, but this case needs five. The fifth leg at the back of the case provides a little extra support right where it's needed. You'll need to add a support block, as shown in detail 'b,' before attaching this leg.

THE GLASS DOORS. Now the cabinet is ready for a couple of doors. As you see in the drawing below and in detail 'c,' the construction uses simple but solid mortise and tenon joinery. But what gives the doors their real interest are the reeded glass panels I installed.

You'll want to put the door frames together first. And once the they're assembled, use a rabbeting bit in the router to create the 1/2"-deep "pocket" that holds the glass. But hold off on installing the glass until you've applied the finish.

INSTALLING THE DOORS. As detail 'd' shows, the doors fit flush with the face frame. I took the simple route and installed them with no-mortise hinges. The doors are held closed with magnetic catches mounted on blocks inside the face frame (drawing below and detail 'd'). Long bar handles make them easy to open.

THE GLASS. After applying the finish, all the cabinet needs is some glass for the doors. The chamfered glass stop you see in detail 'd' gets the job of holding it in place. I mitered it to fit the openings and then rather than take a risk with a hammer and nails, I just spot glued it into the rabbets. Now you can reinstall the doors on the cabinet and fill up your empty corner.

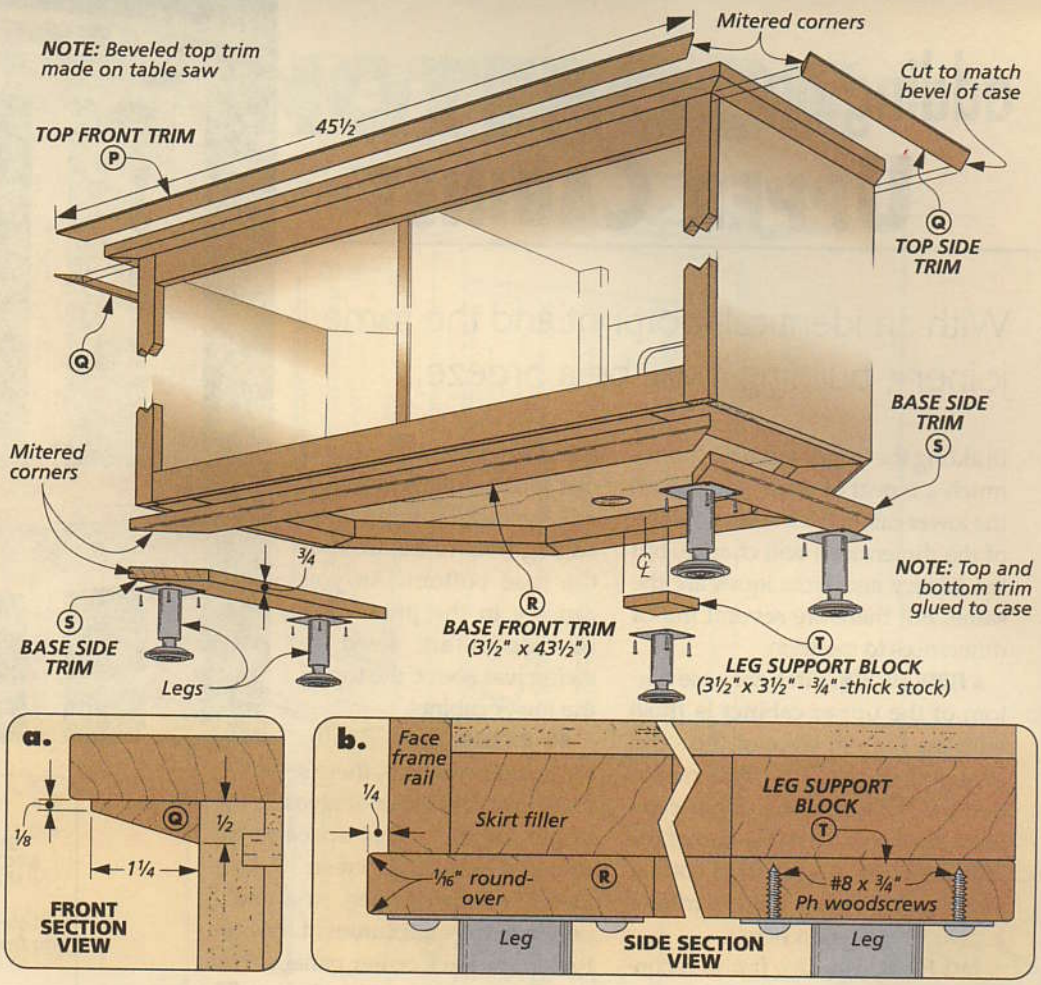

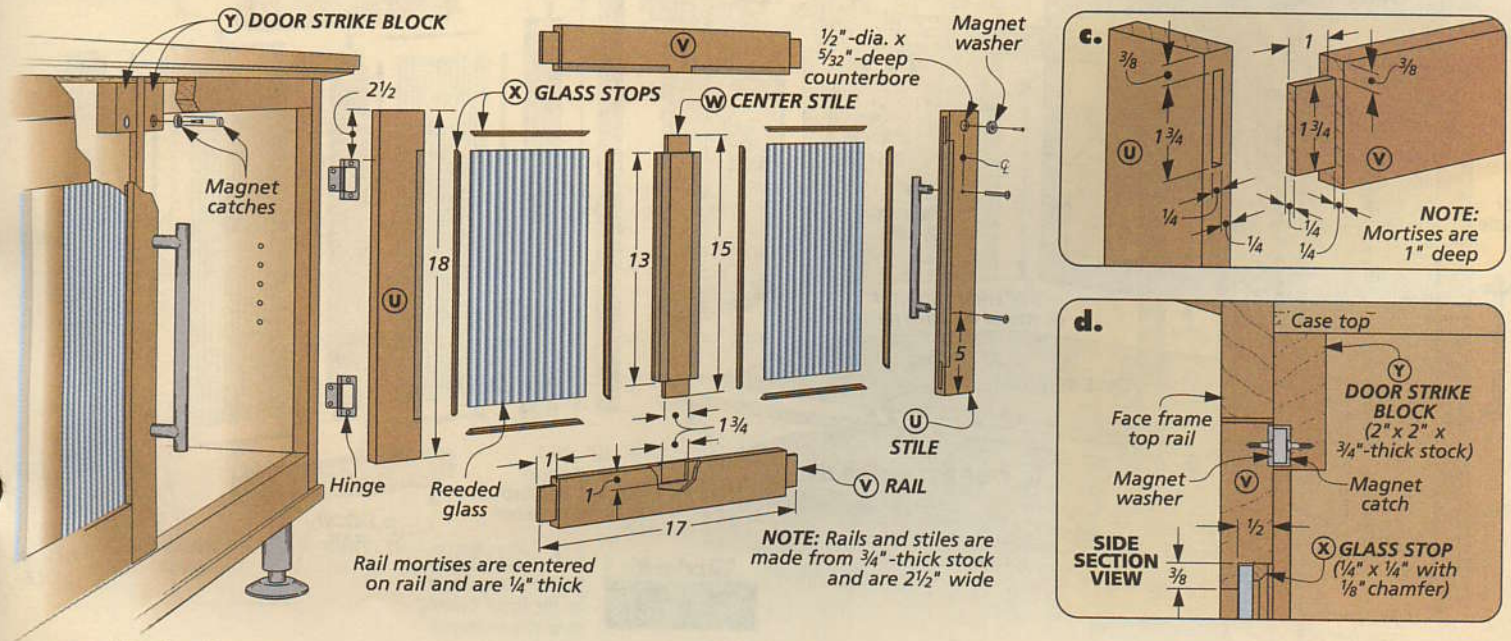

adding an UPPER CABINET

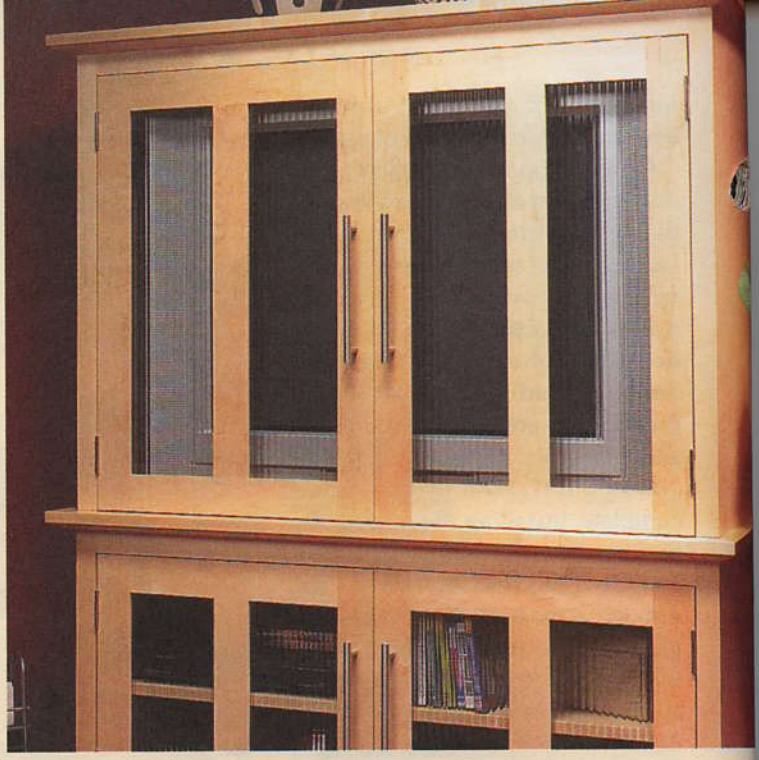

With an identical footprint and the same joinery, building it will be a breeze.

Building the upper cabinet is pretty much a repeat of what you did on the lower cabinet. It's taller, so some of the dimensions will change, but the joinery and techniques are the same. But there are several minor differences to mention.

A FLUSH BOTTOM. First, the case bottom of the upper cabinet is flush with the bottom edge of the sides as shown in detail 'a.' This means that the bottom of the upper cabinet will sit solidly on the top of the lower cabinet. And then of course, you won't have any bottom trim or legs to worry about here.

FACE FRAME. The face frame is constructed just the same as that for the lower cabinet, but you can leave out the bottom rail. Instead, I just glued an edging strip to the front of the case bottom. As you can see in the photo, the two doors are sized to swing just above the top of the lower cabinet.

NO DIVIDER. And finally, for obvious reasons, there's no center divider or shelves in the upper cabinet. This space is all reserved for a large screen TV, so it needs to be wide open. And you'll only need a small cutout at the bottom of the back center panel to run your wires to the cabinet below. W

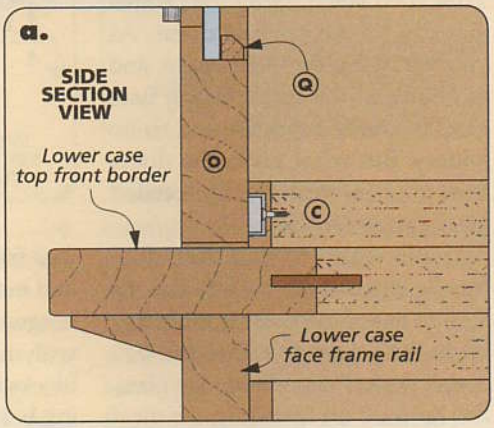

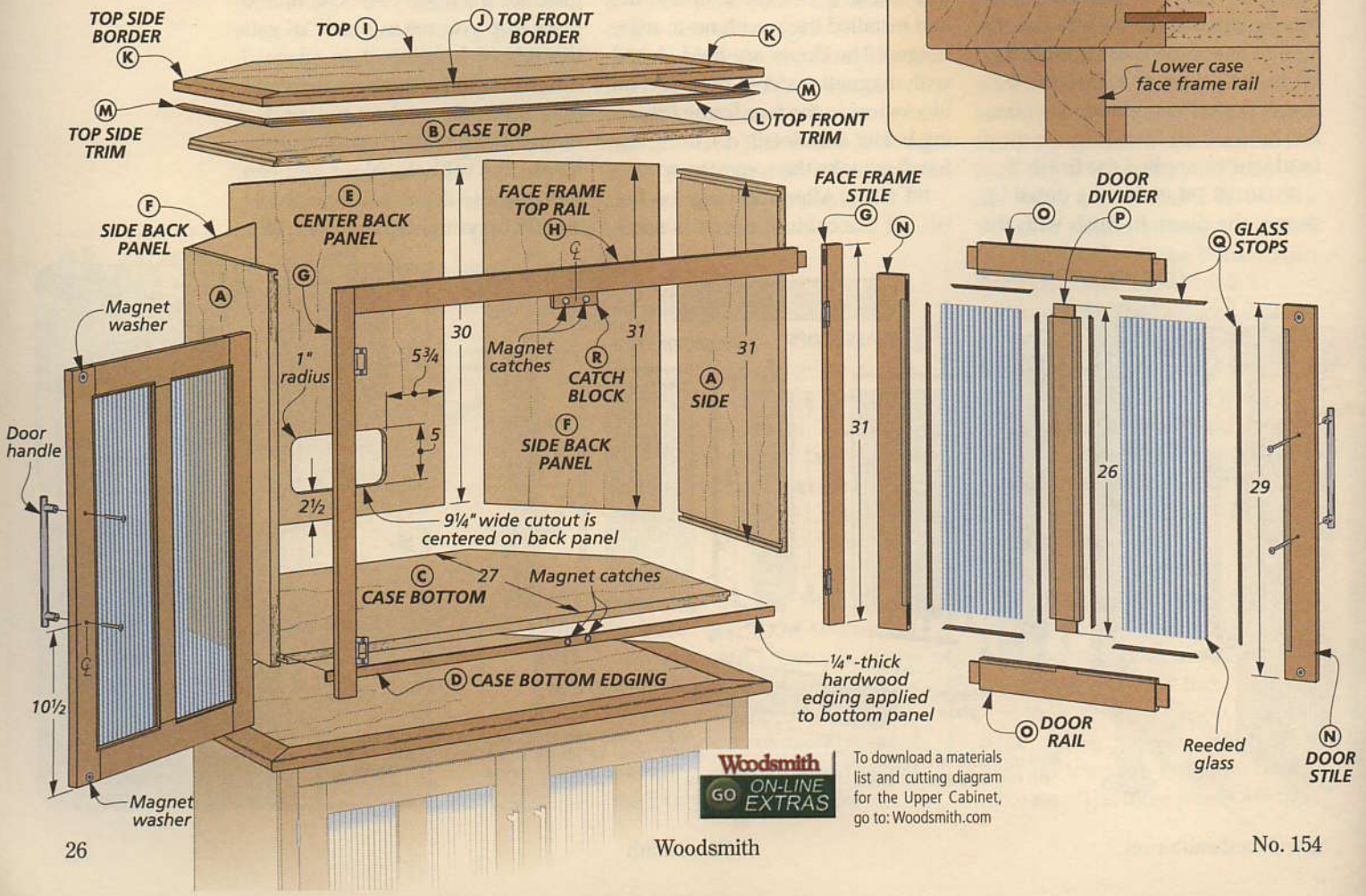

Woodsmith GO ON-LINE EXTRAS

To download a materials list and cutting diagram for the Upper Cabinet, go to: Woodsmith.com

DESIGNER'S NOTEBOOK

A Traditional Style

It never fails to amaze me. Making just a few changes to a project can sometimes completely change the look. The "traditional" corner cabinet you see in the drawing at right is a good example.

The differences are in the details. The first is the most noticeable. I replaced the glass in the doors with "raised" solid-wood panels. And I used round pulls instead of the long handles. Next I switched out the aluminum legs with "tulip-style" wood ones that I purchased. And then I decided that to complete the look, I needed a different top trim. So I put a simple cove molding in place of the beveled trim.

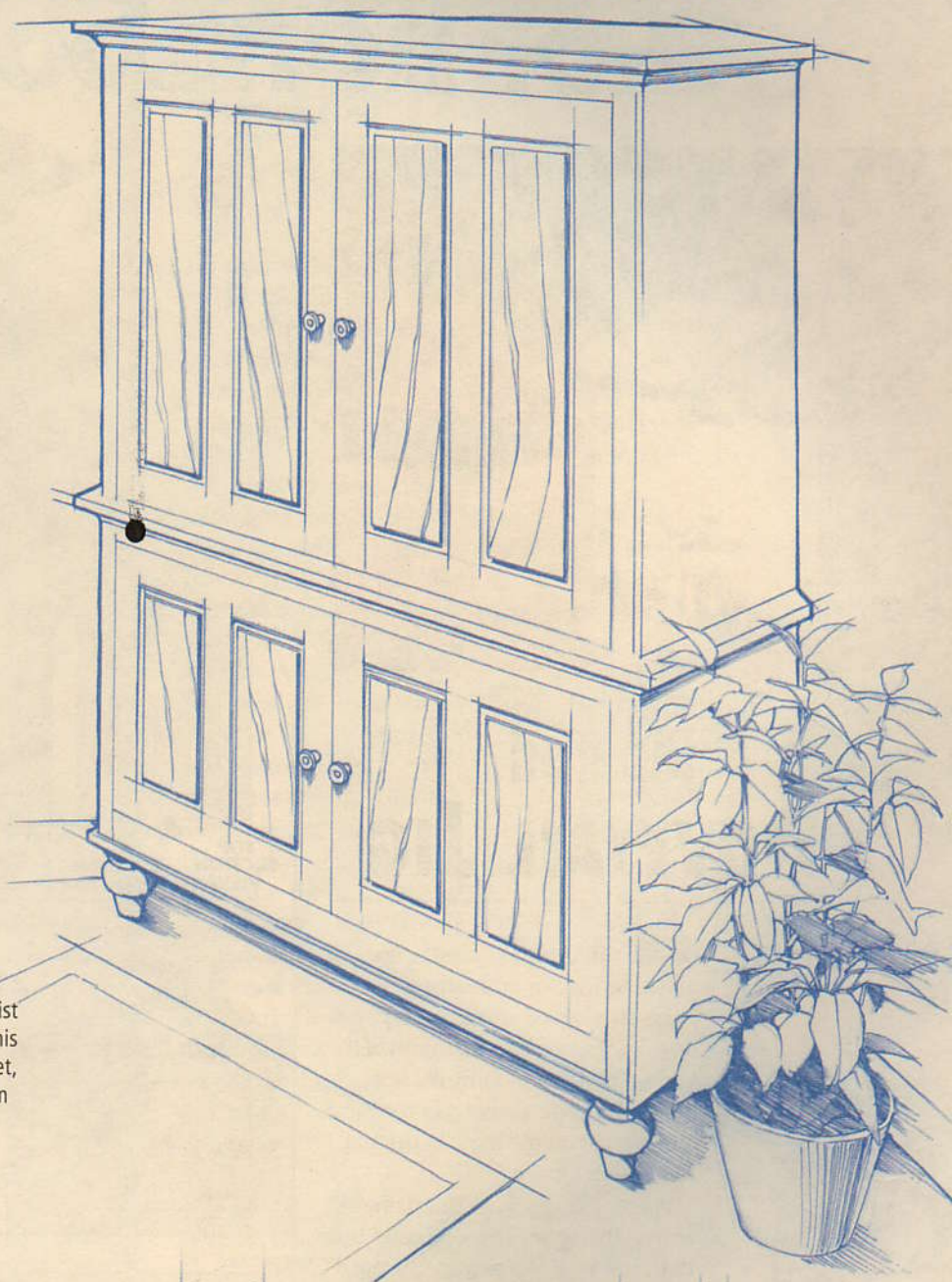

Woodsmith GO ON-LINE EXTRAS

To download a materials list and cutting diagram for this Traditional Corner Cabinet, go to: www.Woodsmith.com

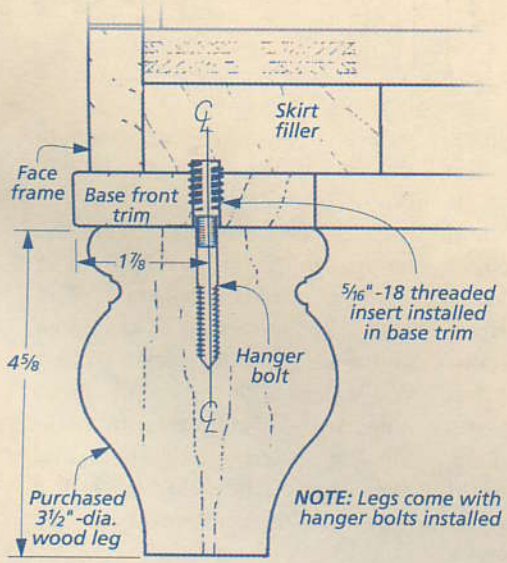

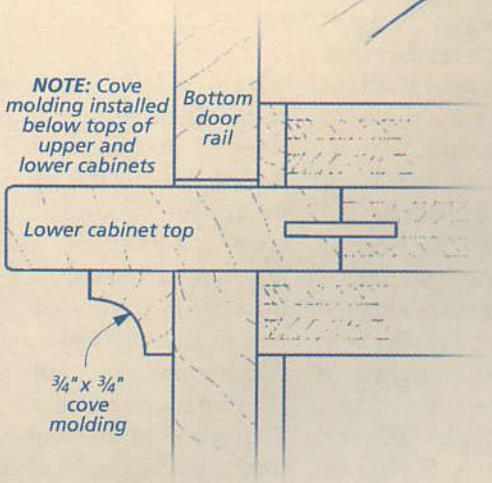

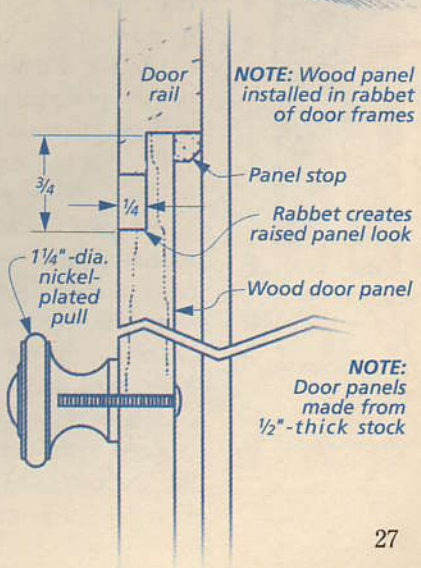

SHOP NOTEBOOK

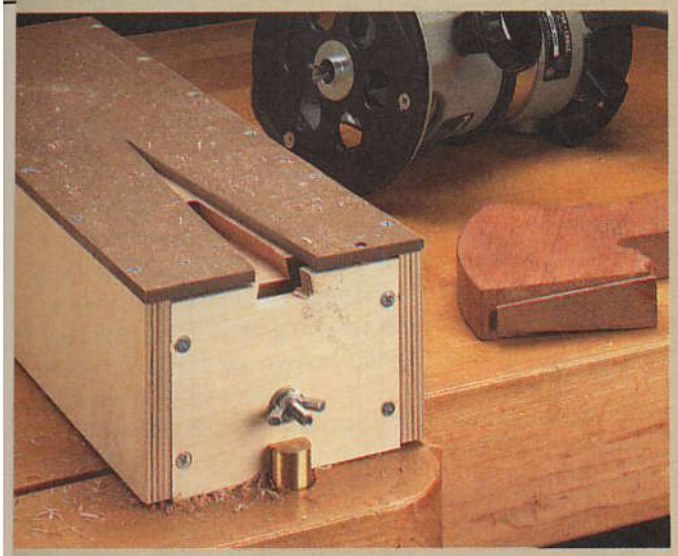

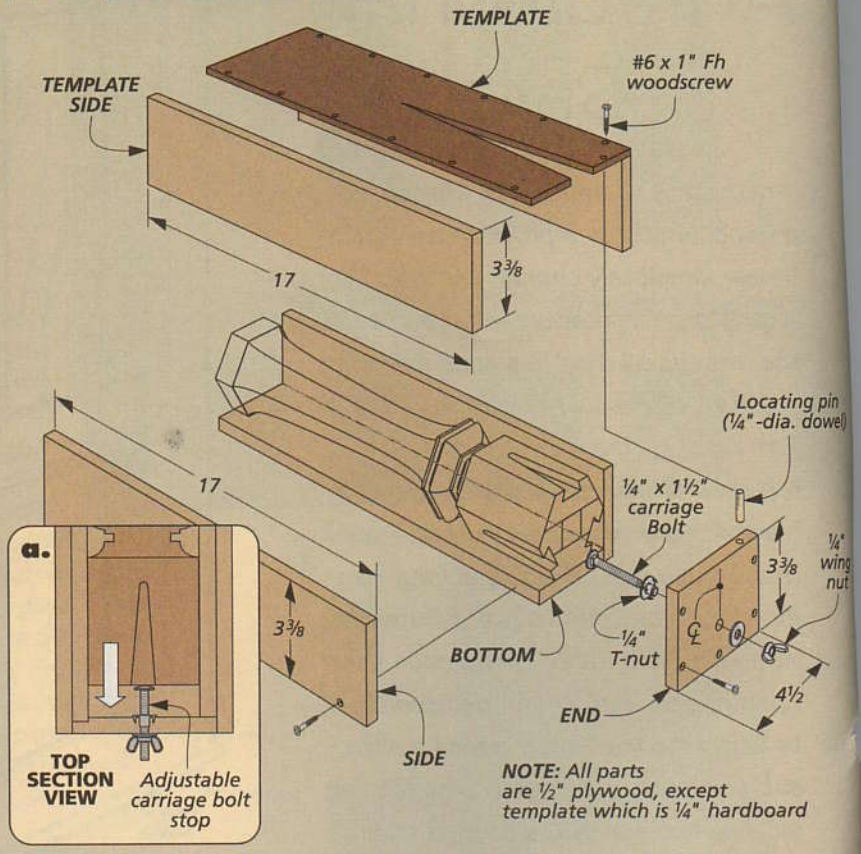

tapered DOVETAIL JIG

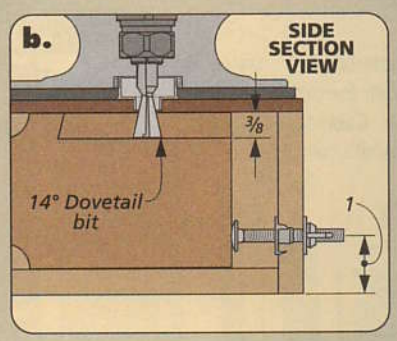

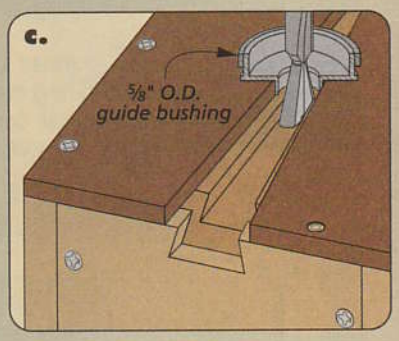

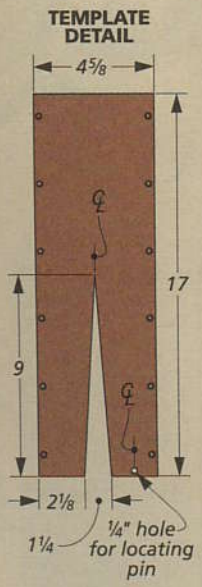

One of the biggest challenges in building the tip and turn table on page 30 was creating the tapered dovetail sockets in the column of the table. The trick is to fit the sockets to the tapered dovetails that are already cut on the legs. To do this, I made a simple jig.

As you can see in the drawing above, the jig is just a plywood box that holds the column. A hardboard template slips over the top of the box and a V-shaped notch in the template guides the router to make the tapered sockets.

The box is sized so the column fits snug inside, flush with the top edges (see drawing). A T-nut is mounted into one end to hold a carriage bolt that serves as a simple stop. The opposite end is left open.

The top of the jig consists of a hardboard template screwed to a couple of plywood sides. This top is sized to fit over the box of the jig. You can use the pattern in the margin at left to make the template. Then after attaching the sides to the template, a hole is drilled in both the template and the box for a small locating pin.

HOW IT WORKS. The way the jig works is fairly simple. A bushing installed in the baseplate of your router follows the V-shaped notch in the template to create a tapered dovetail socket (details 'b' and 'c'). The angle of the notch should match the tapered dovetails you created on the legs. If it doesn't, you can fine-tune the fit by sanding the sides of the notch (see How-To box on opposite page).

Once you have the angle of the socket right, the carriage bolt is used to control its length. The goal is for the leg to slide almost all the way into the socket so that you can tap the last 1/8" or so home with a mallet. Start by making the socket a hair short and then back out the carriage bolt a little at a time until you reach the final length (detail 'a').

How-To: Fit the Socket

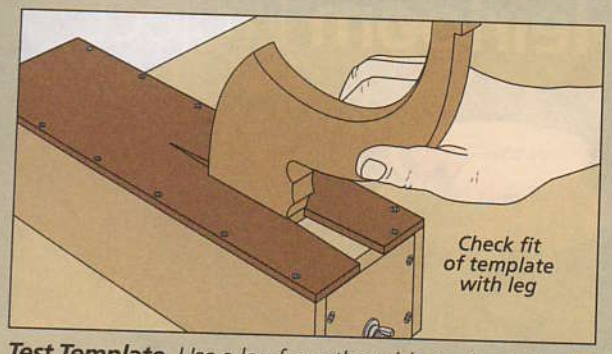

Test Template. *Use a leg from the table to check the initial angle of the notch. The sides of the notch should contact the entire length of the dovetail on the leg.*

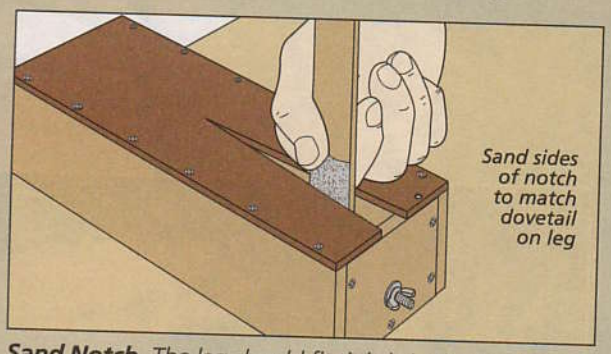

Sand Notch. *The leg should fit tightly in the notch without any side-to-side play. If it doesn't, you can change the opening slightly by sanding the sides of the notch.*

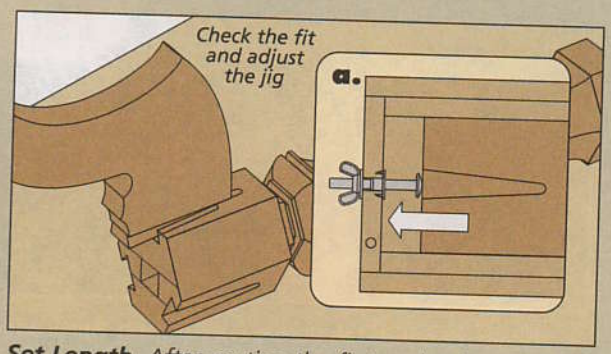

Set Length. *After routing the first socket (I used a test piece), check the fit with the leg. Back out the carriage bolt if necessary to increase the socket length.*

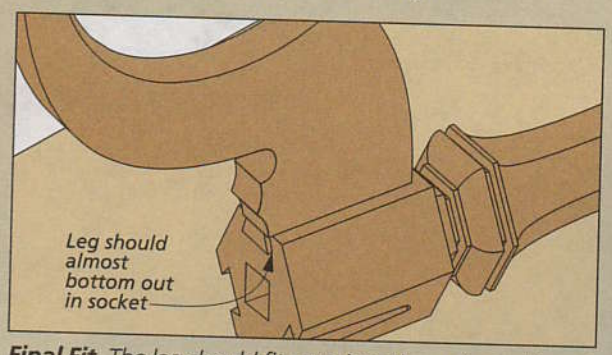

Final Fit. *The leg should fit snug into the socket with only about 1/8" extending past the bottom of the column. After applying glue, drive the leg home with a mallet.*

column PROFILE JIG

Cutting the profile on the column is a job for the band saw. The only problem is that because the column blank is six-sided, you have to hold the blank on edge while you cut the profile on each face. In order to make this easier, I built the jig you see in the photo above. It acts as a cradle for the column blank, holding it while you make the profile cuts. And a hardboard template on top of the jig serves as a cutting guide.

As you can see in the drawing below, the ends of the jig are slotted for a couple of stop blocks that hold the blank against a pair of aluminum angle corners. The template is made according to the pattern shown in the margin. A couple of locating pins mounted in the ends of the jig hold the template in place.

To use the jig, slide the stops against the blank. Then slip the template over the jig and cut the profile on the first face of the column. The template is there simply as a guide — you don't want to cut into it. After cutting the first face, rotate the column and cut the profile on the other five faces.

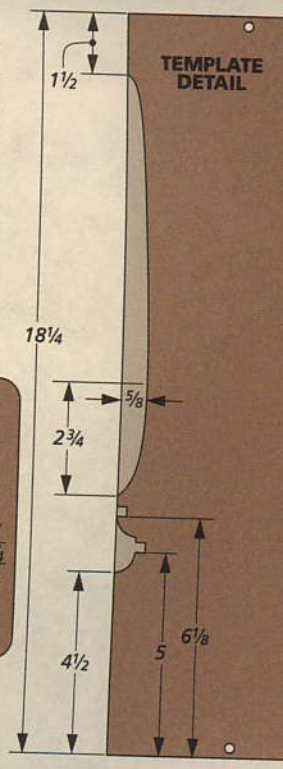

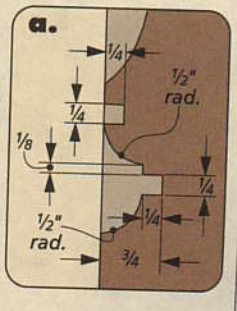

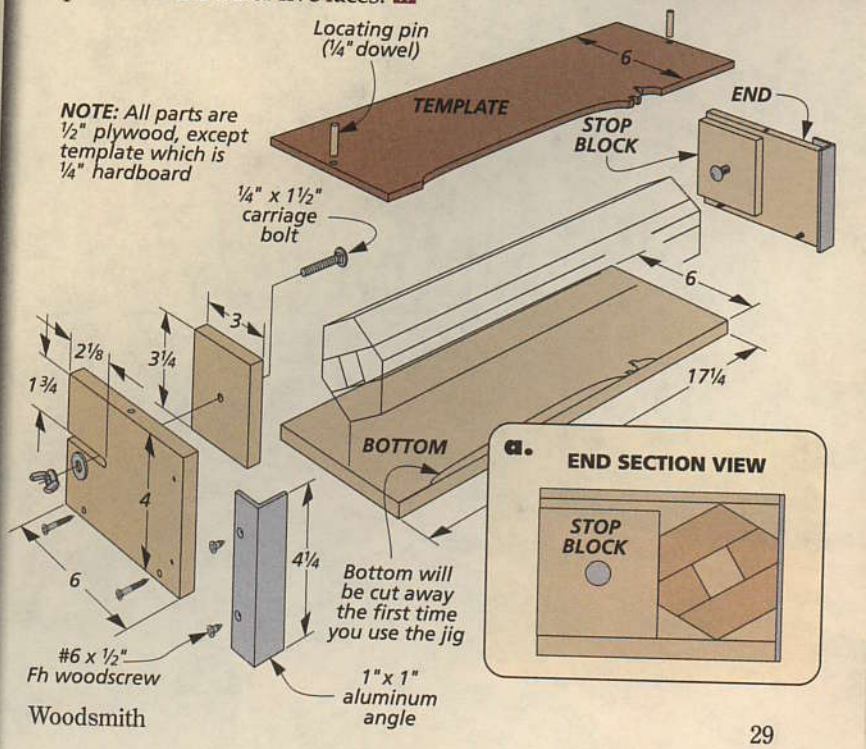

NOTE: *All parts are ½" plywood, except template which is ¼" hardboard*

▲ The secret behind the table is a rotating "birdcage" that allows the top to both tip and turn. In the down position, a latch locks the top to the birdcage so it doesn't flip up if you lean on it or set a heavy object near the edge.

tip and turn Table

When you see this table for the first time, it's hard to know where to focus your attention. Between the figured veneer of the top, the graceful curves of the legs, and the six-sided column, there are plenty of things to catch your eye. But the most interesting feature is one that you don't see right off the bat. If you look under the top of the table, you'll find a small, box-like assembly called a "birdcage" (see detail below). And it's this birdcage that makes the table really special — it allows the top of the table to both tip *and* turn.

Why is this a big deal? To answer that, it helps to know a little about the history of this type of table. Tip and turn tables became popular in the 1700's, when drinking tea was the height of fashion. Instead of just handing your guest a cup of tea, you would set the cup on top of the table (with a saucer, of course) and then gently rotate the top until the tea cup was in front of your guest. When teatime was over, you could tilt the top up and store the table against a wall, out of the way.

CONSTRUCTION DETAILS

OVERALL DIMENSIONS: 25¼"W x 25¼"D x 28¹⁄₁₆"H

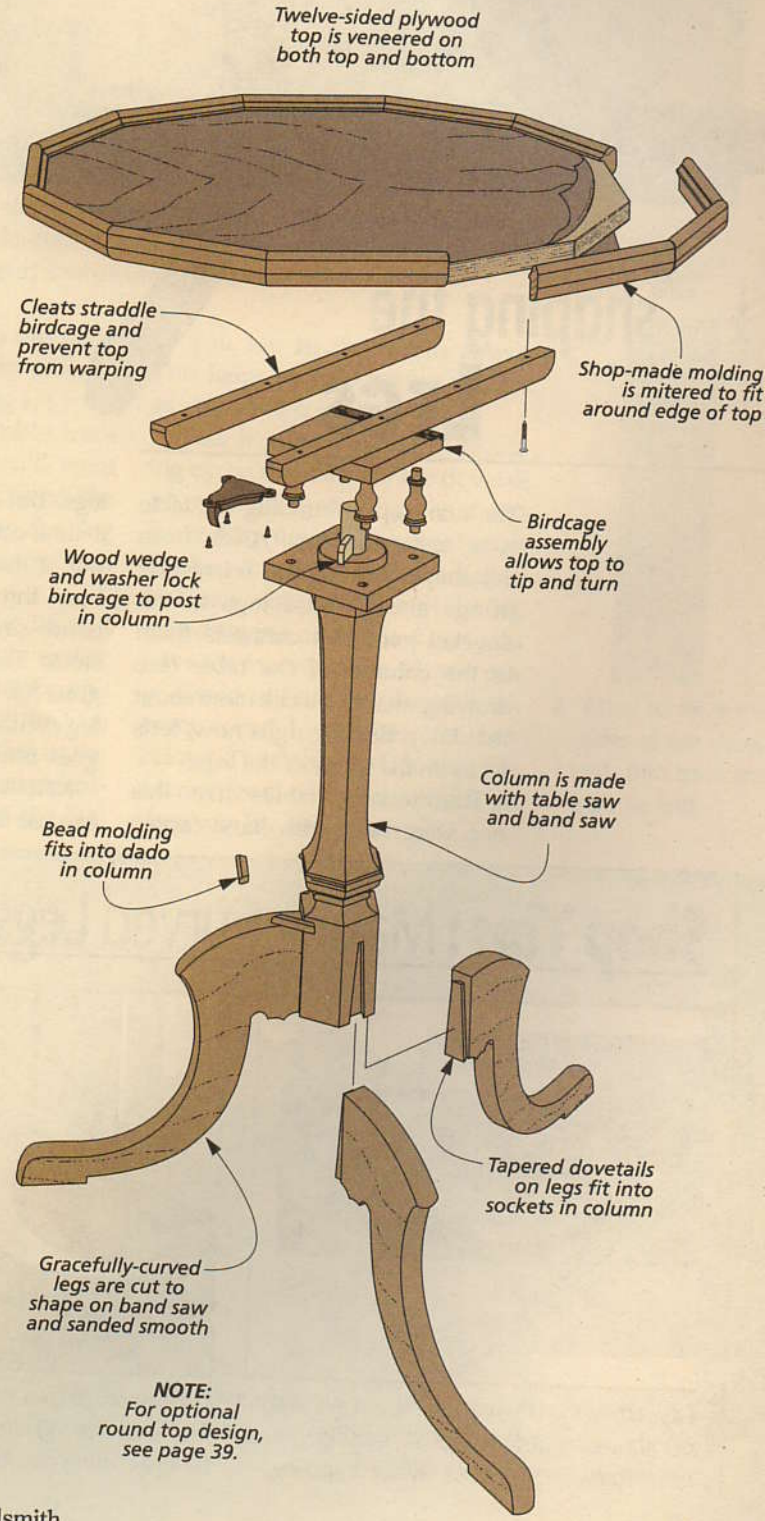

NOTE: For optional round top design, see page 39.

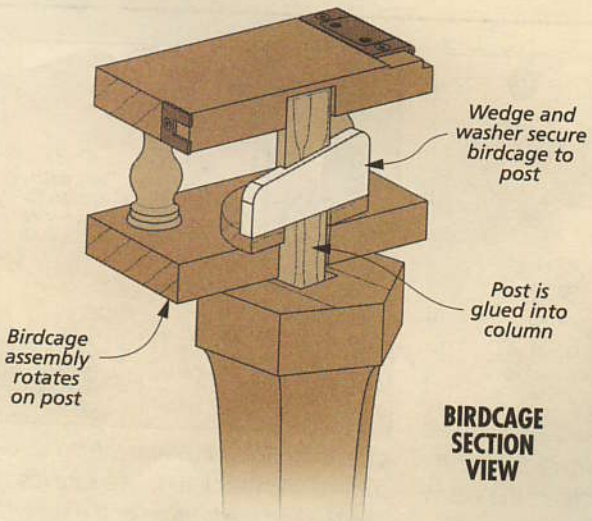

BIRDCAGE SECTION VIEW

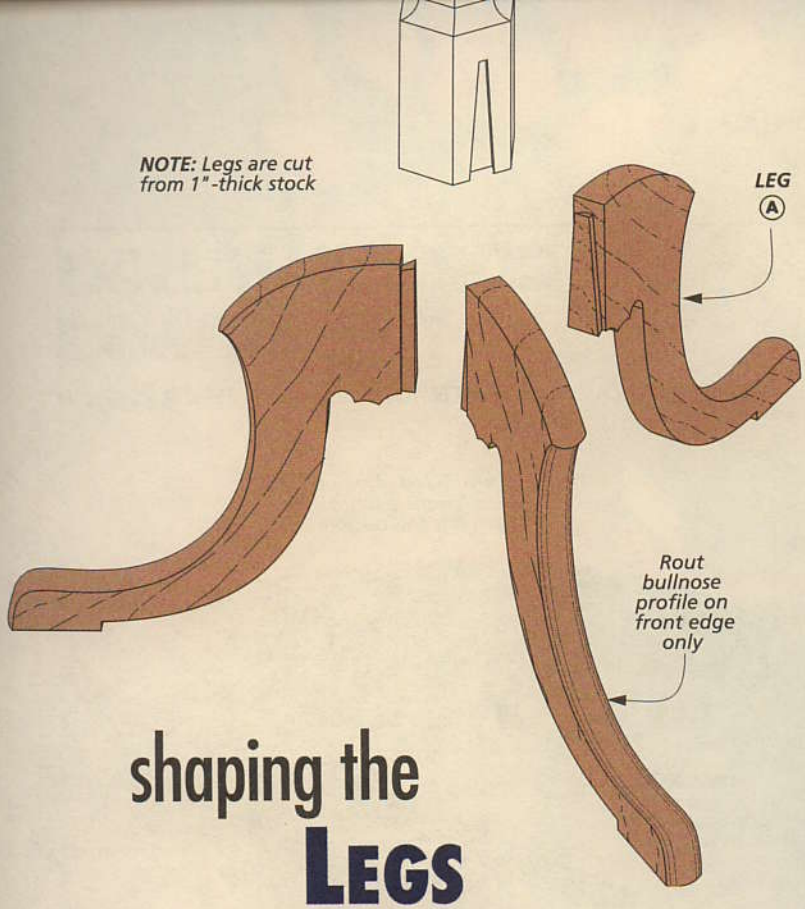

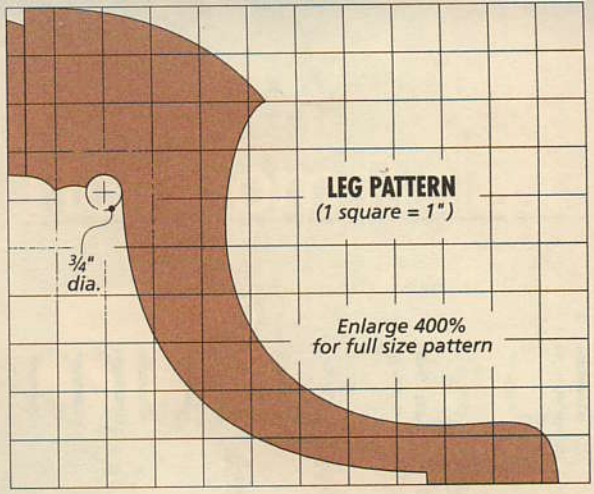

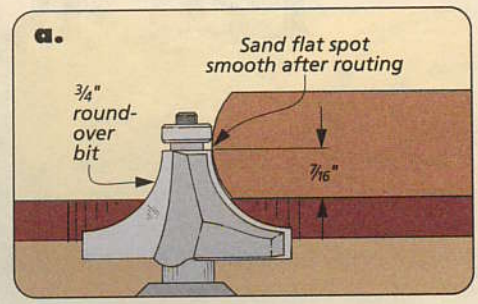

shaping the LEGS

The first step in building the table is to make the legs. Aside from the shape, one of the interesting things about these legs is the dovetail joint that connects them to the column of the table (see drawing above). I'll talk more about that later. But for right now, let's focus on the shape of the legs.

Traditionally, tables like this one were built with hand-carved legs. But carving all three legs is a time-consuming process requiring a fair amount of skill. To keep things simple, I decided to band saw the legs out of flat stock. This way, you still get the graceful appearance of a curved leg without all the effort that goes into carving them by hand.

PATTERN. To make the *legs (A)*, you can use the pattern shown at upper left to lay out the profile on each leg blank. There are just a couple things to point out. First, you want to make sure that the blanks for the legs are the same thickness. Otherwise you'll have some difficulty when it comes to fitting the dovetails on the ends of the legs.

Second, in order to get the strongest possible legs, you should lay out each leg so the

Shop Tips: Making Curved Legs

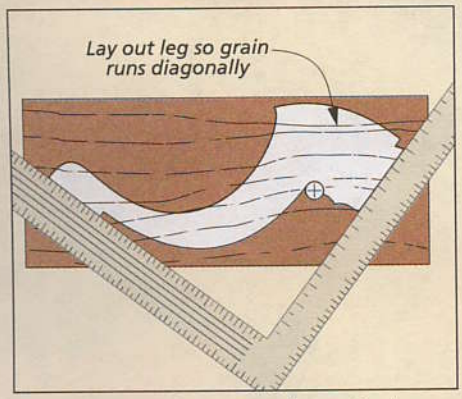

Layout. *Using the pattern shown in the corner above, lay out the legs. A framing square helps to make sure your layout is square.*

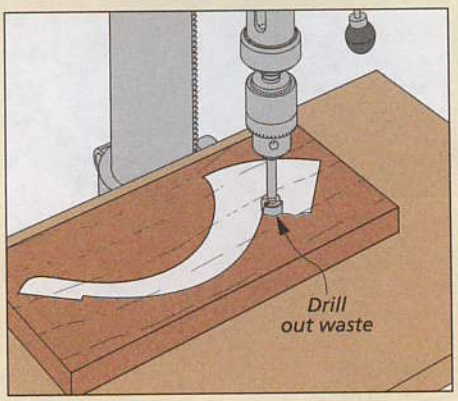

Drill Hole. *To create the tight radius on the inside of the leg, drill a hole in the blank before cutting the leg to shape.*

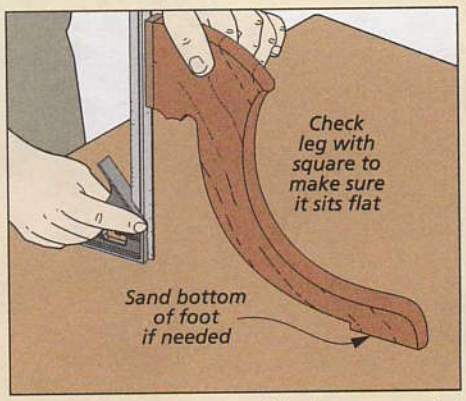

Check for Square. *Stand the leg up on a flat surface and check to make sure it's square. Lightly sand the bottom of the foot if it isn't.*

grain runs diagonally (see box on opposite page). And finally, it's a good idea to make an extra leg to use as a test piece when setting up to rout the dovetails.

BULLNOSE. After cutting and sanding the legs to shape, there's one other detail to take care of. To soften the appearance of the legs, I routed a bullnose profile on the lower curve of each leg (detail 'a' on opposite page). This profile runs from the top of the curve down to the bottom of the foot.

After routing the bullnose, you'll be left with a little flat spot running down the center of the profile. You can just sand this smooth.

TAPERED DOVETAILS. The last step to completing the legs is to make the sliding dovetails on the ends. Creating a sliding dovetail is a pretty straightforward procedure using a router table and a dovetail bit. But the fact that the dovetails are tapered makes things a little more interesting.

The trick to making the tapered dovetail is to hold the leg at a slight angle as you run it along the fence. This way, the bit makes a wider cut at one end of the dovetail than the other. To do this, I taped a 1/4"-thick spacer block to the side of the leg to "kick" one end of the leg out away from the fence just a bit.

SETUP. To set up your router table, start by setting the height of the dovetail bit at 3/8". (You can make some test cuts in a scrap piece of wood to check the setting.)

Next, if your router table fence has adjustable faces, you'll want to slide them up as close to the bit as possible so that the leg and spacer block are supported throughout the cut.

TEST PIECE. To position the fence, I used the extra leg I made earlier as a test piece. Start by taping the spacer to the test piece, just as you see in the first drawing in the box below. Then clamp a stabilizer block to one end of the leg, as you see in the photo above. This helps to keep the leg upright as you slide it past the bit.

Now it's just a matter of sneaking up on the width of the dovetail by gradually moving the fence away from the bit. The goal here is for the wide end of the dovetail to be flush with the sides of the leg (see drawing at right). Once you have the fence positioned, you can go ahead and rout the dovetails on your actual leg pieces (see box below). The final step is to trim the narrow end of the dovetails, as shown in the margin at right.

▲ To create the tapered sliding dovetails, a spacer is taped to the leg as you rout each side of the dovetail. A stabilizer block is clamped at a right angle to the leg to help support it while making the cut.

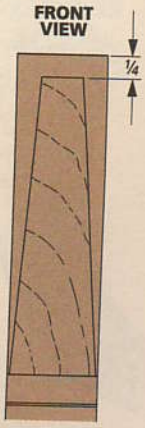

▲ After routing the sides of the dovetail, trim back the narrow end.

How-To: Make Tapered Dovetails

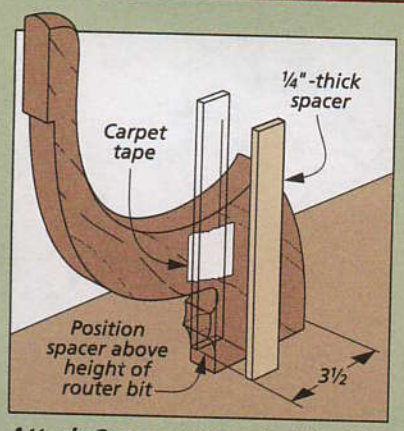

Attach Spacer. *Using double-sided tape, attach the spacer 3½" back from the top edge of the leg.*

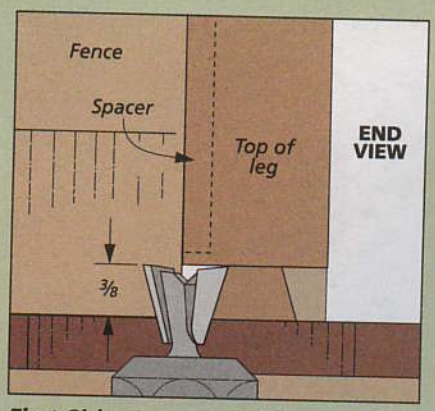

First Side. *To prevent chipout, make a light scoring pass first. Then make a full pass to rout one side of the dovetail.*

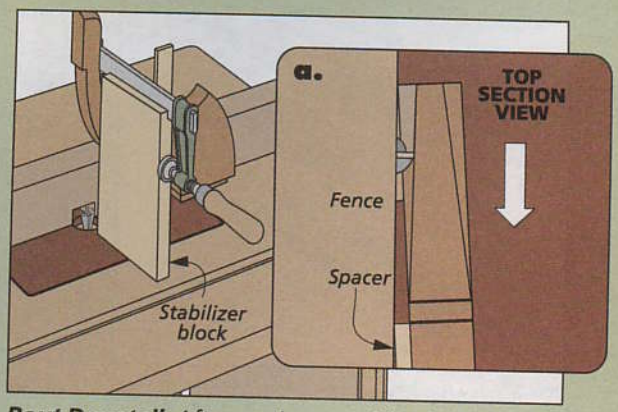

Rout Dovetail. *After routing one side of the dovetail, tape the spacer to the other side of the leg to complete the dovetail. Then trim off the top end of the dovetail.*

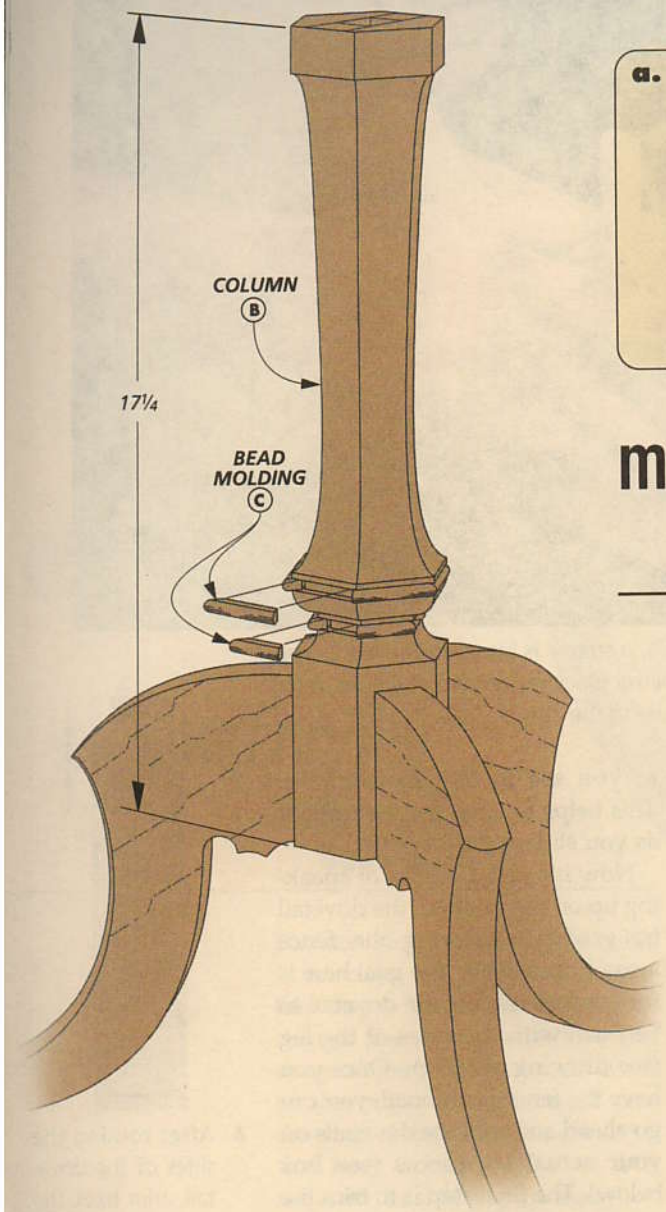

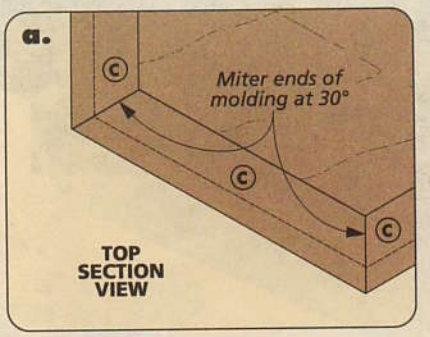

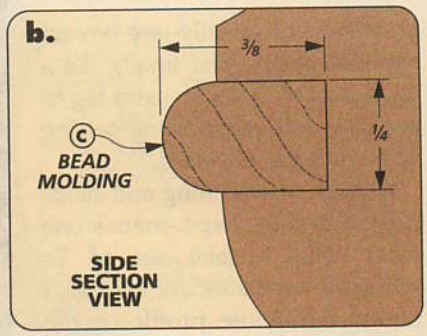

making the COLUMN

Once the legs are finished, the next part of the table to make is the column. Originally, most tip and turn tables like this one had columns that were turned on a lathe. But like the legs, I chose another method in order to simplify the construction a bit.

Instead of turning a round column, I used the table saw to create a hexagonal column. Then I cut matching profiles on each face of the column with a band saw. Finally, three tapered dovetail sockets are routed at the bottom of the column to hold the legs.

COLUMN BLANK. To make the *column (B)*, start by gluing up a blank. I made my blank extra long (about 24") so that I would have enough extra to use as a test piece when making the dovetail sockets.

Instead of gluing up a solid blank, I made the column blank out of four separate pieces of wood, leaving a square hole right through the center (see drawing at left and box below).

The reason for this has to do with the top of the table. The top is supported on a round post (a dowel) that is glued into the end of the column. But instead of trying to drill a hole in the end of the column for the dowel, I found it a lot easier to leave an opening in the blank.

When you're gluing up the column, a small scrap piece is glued

How-To: Make a Hexagonal Column

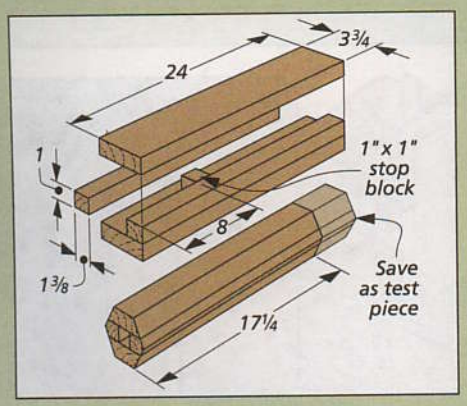

Glue up the Blank. *The blank for the column is glued up out of four pieces, leaving a 1" square hole in the center of the blank for the dowel post that is added later.*

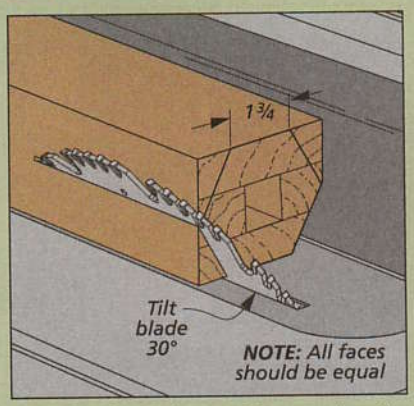

Bevel the Edges. *To create the hexagonal shape of the column, tilt the saw blade 30° and rip a bevel along each corner of the blank.*

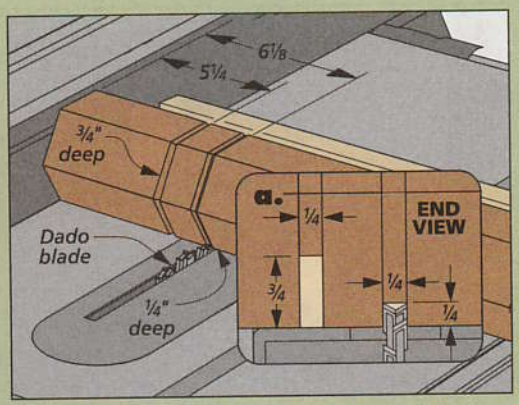

Cut the Dadoes. *After cutting the blank to length, cut two ¼"-wide dadoes on each of the six sides of the blank. You can use the rip fence as a stop to position the dadoes.*

inside the opening to serve as a stop for the post. (The post won't get added until later, when you make the birdcage.)

SHAPING THE COLUMN. After the blank is glued up, you'll need to make some beveled cuts to create the hexagonal shape. Then you can go ahead and cut the blank to length. (Remember to save the cut-off end to use later as your test piece.)

Before you start shaping the blank on the band saw, you'll need to cut a couple of 1/4"-wide dadoes on all six faces of the blank. These will be used to hold some bead molding. Although the bead molding won't be added until later, it's a lot easier to cut the dadoes now, before the profile has been cut on the faces.

CUTTING THE PROFILE. At this point, you're ready to start shaping the column by cutting the profile on each face of the blank. To do this, I made a simple jig to hold the column (see first drawing in box below). The jig does two things. First, it holds the blank on edge so that you can band saw the profile on each face. And second, the profile on the top of the jig serves as a guide to follow while cutting each face. For more on making and using the jig, see page 29.

The band saw will leave the surfaces of the column a bit rough. So you're going to want to sand them smooth with a sanding drum attachment on your drill press. (You can remove the template and use the jig to hold the column while sanding as well.) The trick here is to sand each face of the column evenly. A good way to check this is to sight down along each edge of the column from one end. The edge where two faces meet should run in a straight line down the length of the column.

DOVETAIL SOCKETS. After you've sanded the column, you can make the tapered dovetail sockets that hold the legs. To do this, I made another jig (see second drawing in box below). It's pretty simple, and it allows you to fine tune the fit of the sockets to match the dovetails on the legs. You can read more about making and using the jig on page 28.

BEAD MOLDING. The last step to complete the column is to install some bead molding in the dadoes you cut in the column. You can make this molding by rounding over the edges of a wide blank on the router table. (I sized the thickness of the blank to match the width of the dadoes in the column.) Then just rip the molding to width from the edges of the blank, like you see in the box below.

▲ The legs should slide almost all the way into the sockets in the column. Then a couple of light mallet taps is all it should take to drive the legs home.

After making the molding, individual pieces are simply mitered to fit around the column and glued in place, as shown in detail 'a' on the opposite page and in the box below.

ADDING THE LEGS. Before moving on to making the top, the legs need to be added to the column. This is simply a matter of applying a little glue to the sides of the dovetail on each leg and then gently driving the legs home with a mallet (see photo above).

Complete the Column

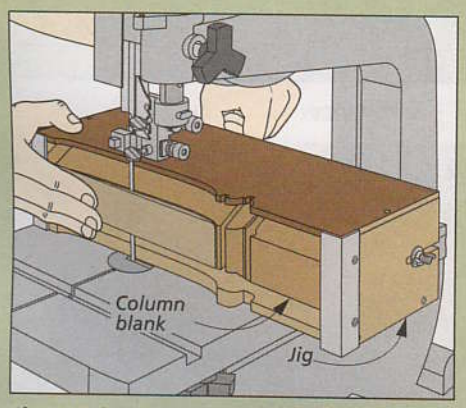

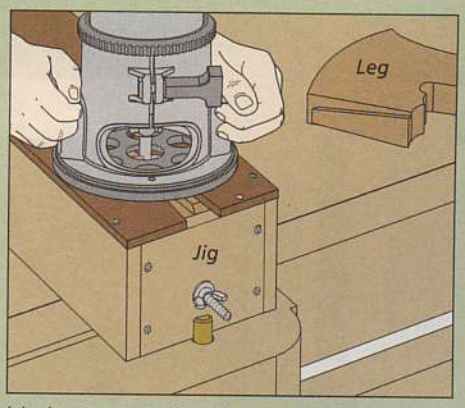

Jigs Make it Easy. *A simple jig holds the blank in position while cutting the profile on the six faces of the column. To get the best results, use a narrow (1/8"-wide) band saw blade. To rout the dovetail sockets, a second jig is used along with a router, a dovetail bit and a guide bushing. For more on making both these jigs, see page 28.*

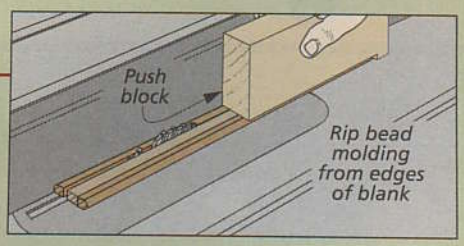

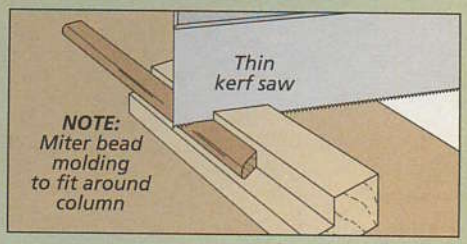

Miter Bead Molding. *To miter the short molding pieces, I made a tiny miter box by cutting a rabbet in a scrap piece of wood. A thin-kerf saw makes a clean, smooth cut.*

building the Top

▲ Figured veneer and decorative edge molding give the twelve-sided top of the table an elegant look.

A *dodecagon*. That's the name for a twelve-sided figure like the top of this table. (I had to look it up in the dictionary to make sure.) But it's not just the shape of the table top that's appealing. The highly-figured grain of the wood is just as eye-catching.

Traditionally, tables like this one would have featured a top carved out of solid wood, including the edge molding. But finding a piece of figured mahogany large enough for the top of the table would be difficult (not to mention expensive). So I did the next best thing.

I made the *top (D)* out of plywood and covered it with figured veneer. Once the edge molding is applied, you'll be the only one that knows it isn't a solid piece of wood. As an added bonus, you won't have to worry about the top warping or cupping over time.

LAYOUT. At first glance, making a table top with twelve sides might seem a bit intimidating. But in reality, it's not much different than making a square top — there are just a few more corners. The secret is in the layout. And fortunately, there's a simple way to lay out a twelve-sided top that doesn't involve protractors, angles, or a degree in geometry. Just follow the steps in the box below.

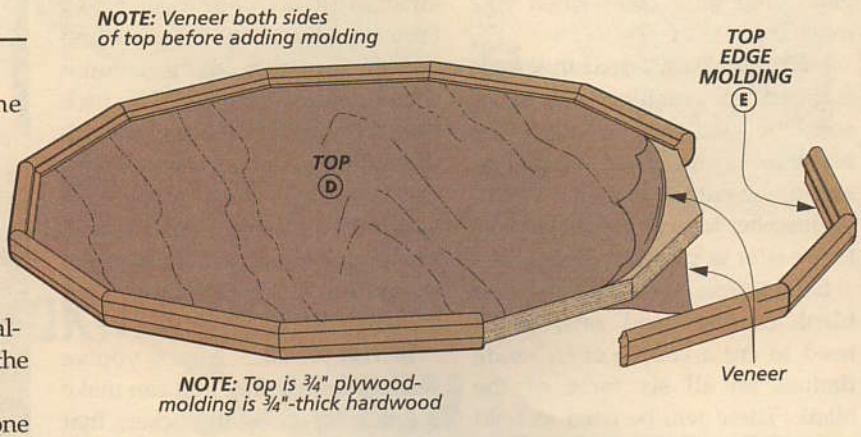

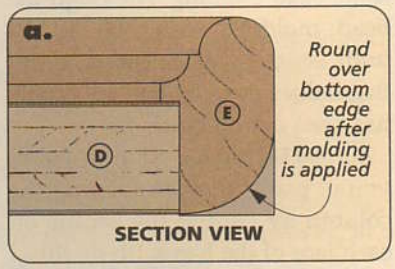

CUTTING TO SHAPE. Once you've laid out the shape of the top on your blank, you can go ahead and start cutting the top from the blank. I did this in two steps. First, I cut the top to rough shape using a jig saw, as you see in the top drawing on the opposite page. Don't worry about cutting right up to the line at this point since you're going to be cleaning up the top in the next step.

With the top roughed out to its basic shape, the next step is to clean up the edges. To do this, I turned to the router. Using a straightedge guide and a patternmaker's bit, I trimmed each side of the top flush with its layout line (see second drawing on opposite page). Here's where you want to be careful. Make sure that you clamp the fence right along the lay out line on each side so that all twelve sides are equal. The closer you get to a perfect, twelve-sided top, the easier it will be when it comes to fitting the molding around the top.

How-To: Lay Out a Twelve-Sided Top

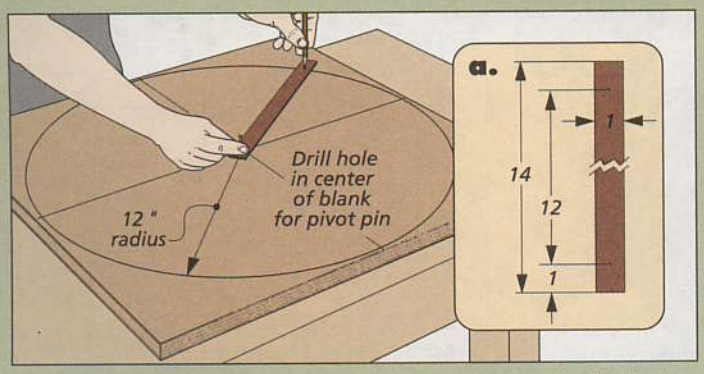

Start with a Circle. *Using a shop-made compass (see detail 'a'), draw a 24"-dia. circle on a ¾" plywood blank. Then divide the circle into quarters by drawing two diameters at a right angle.*

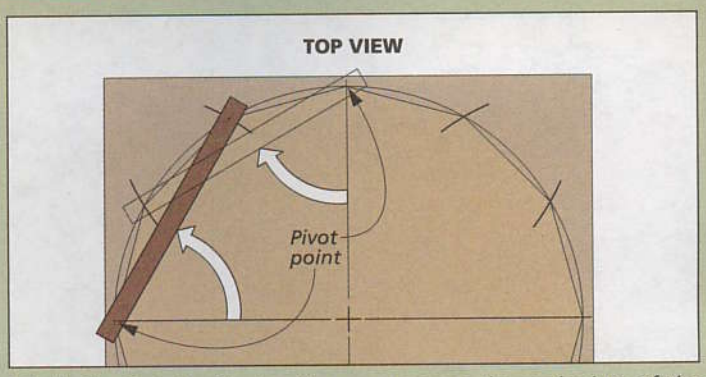

Mark the Points. *Placing the compass on the endpoints of the diameters you just drew, mark off the remaining points of the top around the edge of the circle. Then draw lines to connect the points.*

VENEER. Once you've finished shaping the top, you can add the veneer. Because you'll be able to see the underside of the top when the table is tilted, I veneered both sides of the top. This also helps to keep the top a little more stable, making it less likely to cup or warp over time.

There's one important thing to keep in mind when adding the veneer. Because the top will be seen from both sides, make sure the grain of the veneer is running in the same direction on both surfaces. After gluing the veneer down, I trimmed it flush with the edge of the top using a sharp knife.

TOP EDGE MOLDING. Once all the veneering is out of the way, you can start making the edge molding. A router table and a couple of router bits are all you need for this. It's just a matter of following the steps in the box below.

When it came to cutting the rabbet in the molding for the top, instead of trying to size the rabbet to fit the top perfectly, I made the rabbet a hair wider (taller) than the thickness of the top. This allowed me to sand the bottom edge of the molding perfectly flush with the underside of the top after it was glued in place.

Once the molding is mitered and glued around the top, the only thing left to do is round over the bottom edge. I did this by turning the top upside down on my workbench and using a handheld router with a round-over bit, just like you see in the box below.

To avoid cutting into the veneer when routing this final roundover, I didn't lower the bit to full depth. Instead, I left a little flat spot on the bottom of the molding and then sanded it to make a smooth transition with the veneered bottom face of the top. Now you're almost ready to attach the top. But first, you have to build the birdcage.

Shop Tip: Cutting the Top

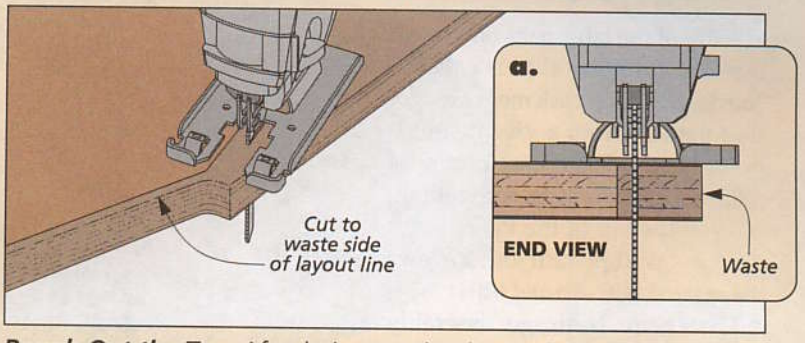

Rough Out the Top. *After laying out the shape of the top on your plywood blank, cut the top to rough size using a jig saw and staying about 1/16" to 1/8" to the waste side of the layout lines.*

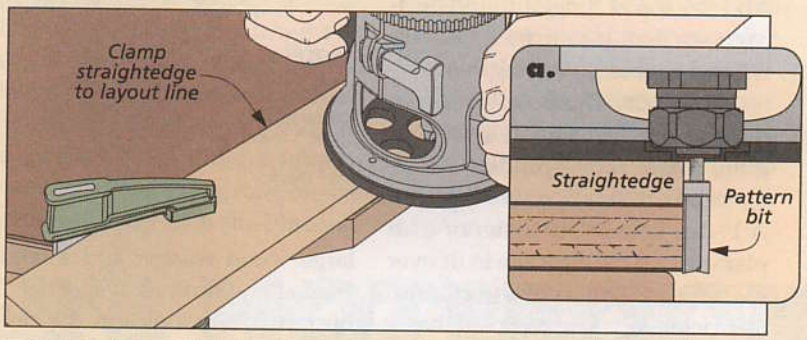

Trim the Edges Flush. *To clean up the rough-cut edges of the top, carefully clamp a straightedge guide to each layout line and trim the edge flush using a router and a pattern bit.*

Make the Edge Molding

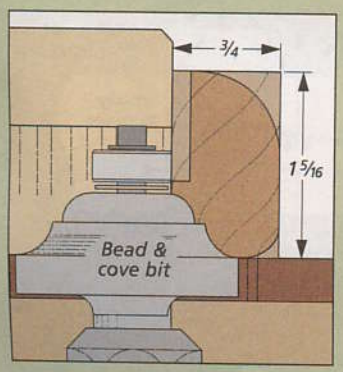

Bead and Cove. *A bead and cove bit creates the profile on the inside edge of the molding.*

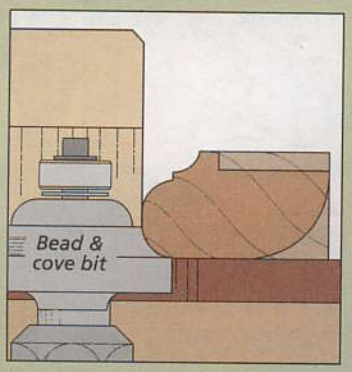

Roundover. *To round over the outer edge, you can use just the bead portion of the same bit.*

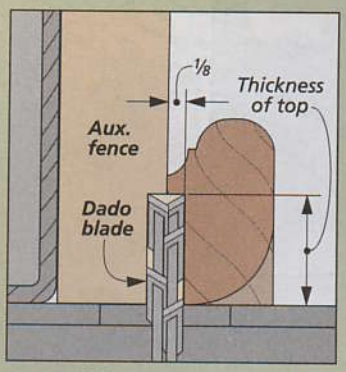

Cut Rabbet. *A shallow rabbet allows the molding to fit tightly over the edge of the table top.*

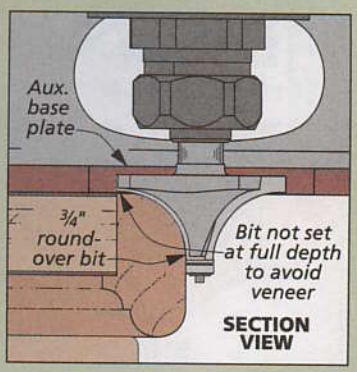

Bottom Edge. *After gluing the molding to the top, round over the bottom edge of the molding.*

adding the BIRDCAGE

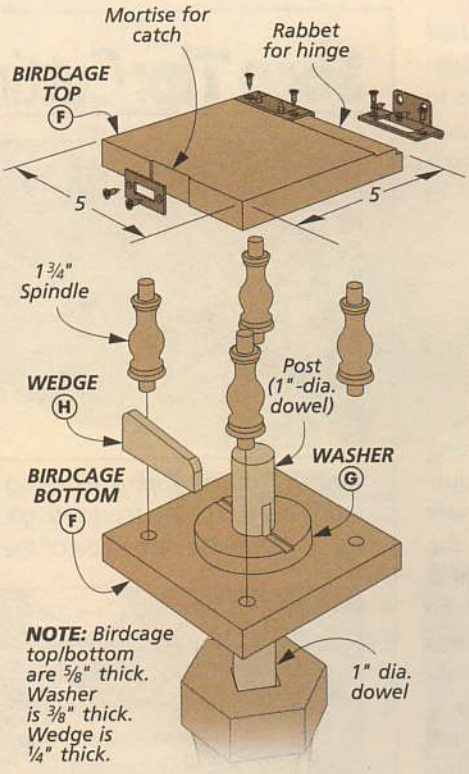

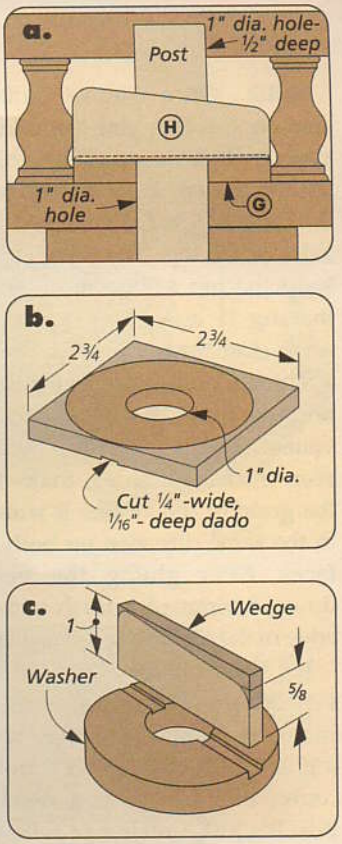

The top of the table rests on a small box-like platform that is called a "birdcage." (Don't ask me how it got that name.) From a visual standpoint, the birdcage may not be as interesting as the legs, the column, or even the top of the table. But it plays a very important role. It allows the table to both tip *and* turn.

The entire birdcage assembly turns freely on a post mounted in the end of the column. This allows you to rotate the top of the table. And the top is hinged to the birdcage so that it can be tilted up when the table isn't being used.

CONSTRUCTION. There isn't much to making the birdcage. It's nothing more than four spindles sandwiched between two wood plates. A 1"-dia. hole in the center of each plate allows the birdcage to fit over the post in the top of the column (see detail 'a'). The top plate has a "double" rabbet for the hinges that are used later to attach the top (see detail 'a' on opposite page).

ATTACHING THE BIRDCAGE. Attaching the birdcage to the column is a little more involved, however. As I mentioned, the birdcage fits over a post that's glued into the end of the column. It's held in place by a large wood washer and a wedge that slips through a slot in the post, just as you see in the drawing above and in detail 'a.'

I started by making the post. This is nothing more than a 1"-dia. hardwood dowel. To determine the length of the post, insert it into the column until it rests on the stop inside the column opening. Then place the birdcage over the post to determine how much you need to trim off the end. The goal here is for the birdcage to rest on top of the column — not the top of the post.

Before gluing the post into the column, you'll need to make a slot near the end for the wedge. The box below explains how to do this.

WASHER & WEDGE. There's not much to making the washer and wedge. The washer has a hole in the center to fit over the post, and a shallow dado to hold the wedge (details 'b'

How-To: Make a Slot in a Dowel

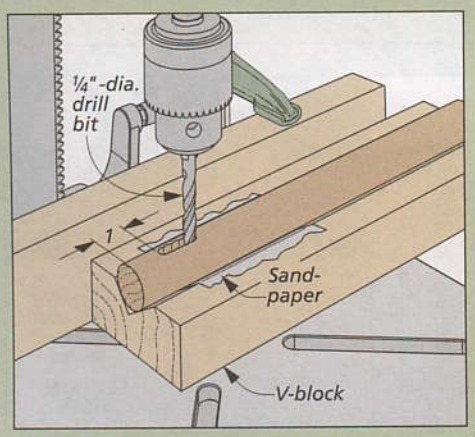

Drill Out the Waste. *With the post placed in a V-block, drill a series of overlapping holes to remove most of the waste from the slot.*

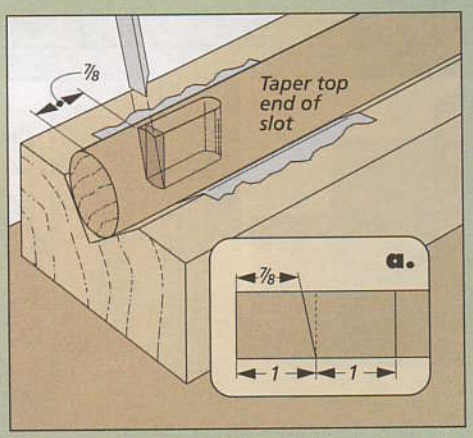

Taper End of Slot. *Using a chisel, taper the end of the slot closest to the end of the post so the wedge can lock against it.*

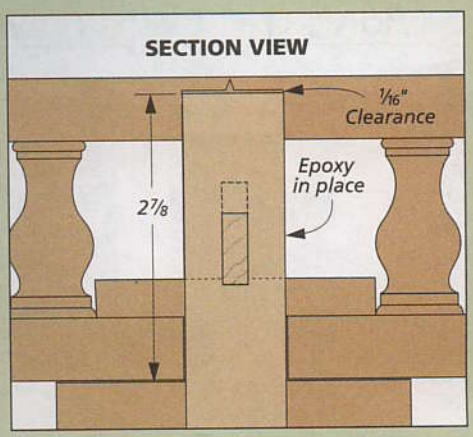

Add Wedge and Washer. *Once the post is glued into the column, you can add the birdcage, washer, and wedge.*

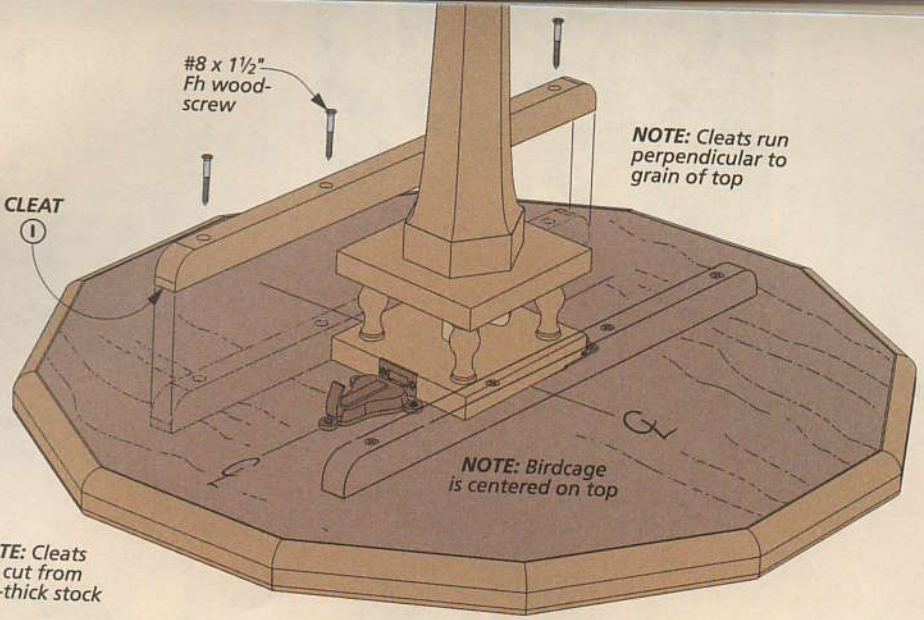

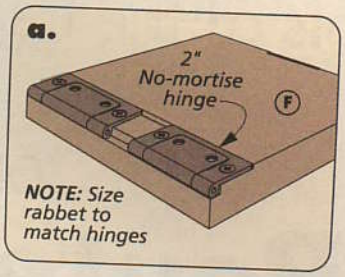

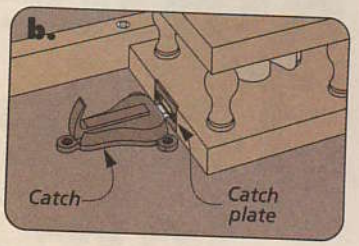

and "c" on page 38). After shaping the wedge to fit the slot in the post, you can slip the birdcage and washer over the post and secure them with the wedge.

CLEATS. Before adding the top, there's one other detail to take care of. A couple of cleats are attached to the bottom of the top. These straddle the birdcage and take some of the strain off the hinges when the top is rotated.

HARDWARE. After staining and finishing the table, I added the hardware. A pair of no-mortise hinges connect the top with the birdcage (detail 'a'). And a catch prevents the top from tipping when using the table (detail 'b').

Now that the table is complete, you might want to invite a few of your friends over to enjoy a cup of tea (or maybe another beverage of your choice.)

DESIGNER'S NOTEBOOK

Solid Table Top

Before there was plywood, tip and turn tables had solid wood tops, often with intricately carved or molded edges. If you'd like to make this type of a top, here's one that's challenging, but not too difficult.

The top starts out as a thick, square blank. A router with a trammel is used to cut the top to shape and to create the profile on the edge. Then a straight bit is used to nibble away the waste from the center of the top.

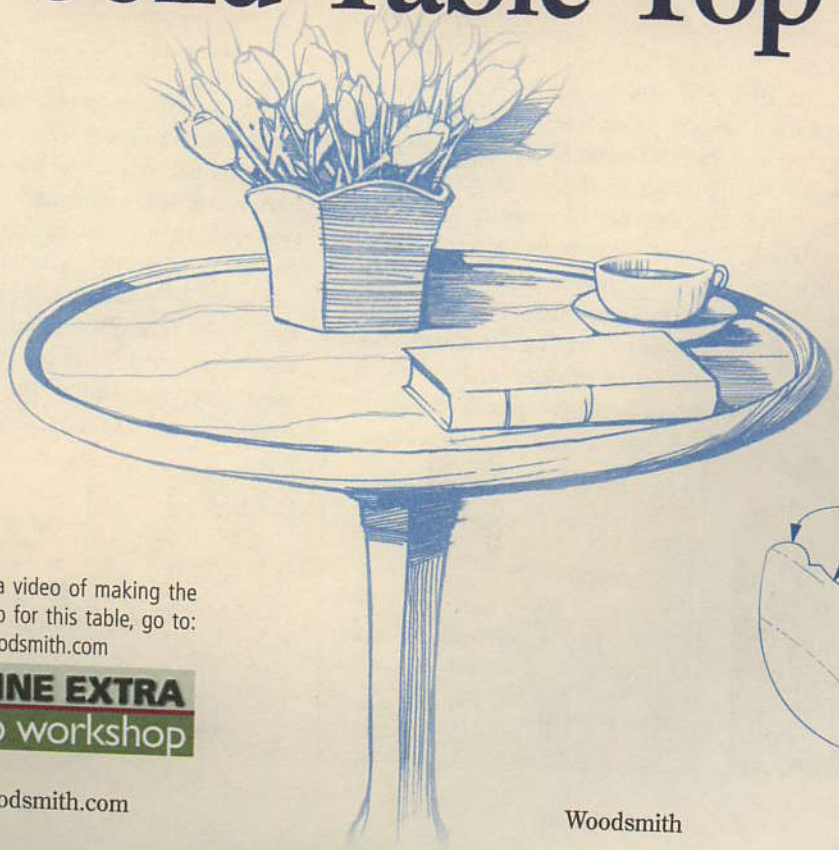

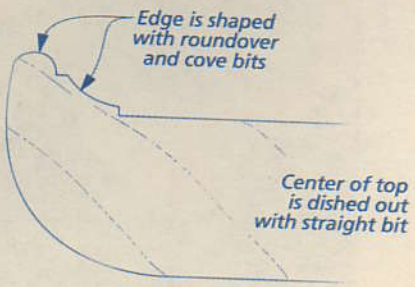

CROSS SECTION

To view a video of making the round top for this table, go to: www.Woodsmith.com

ONLINE EXTRA
video workshop

4 great bits for Router Table Joinery

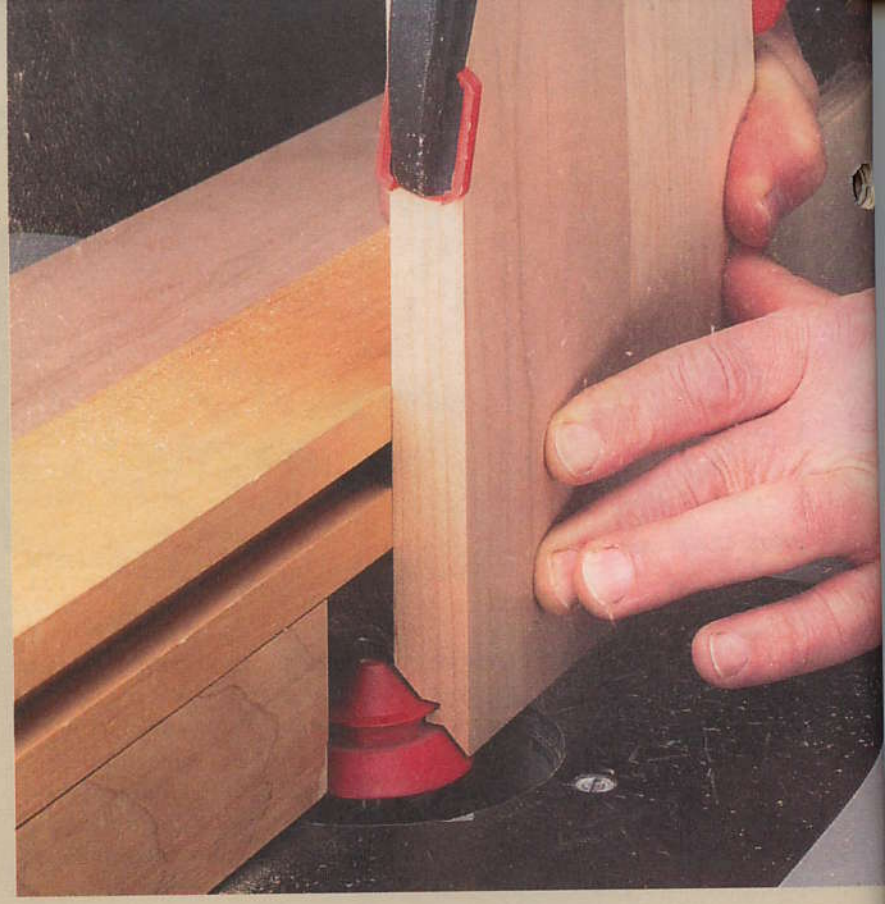

A router table can be a pretty handy tool when it comes to cutting joinery. Dadoes, rabbets, grooves, and other simple cuts can easily be made using standard straight bits.

But in the past few years, router bit manufacturers have come out with several new bits that open up some really interesting joinery possibilities. So I decided to pick up several of these bits for a trial run. And what I found in my quick test was pretty impressive.

You can view a video of these router bits in use by going to: www.Woodsmith.com

ONLINE EXTRA
video workshop

The four bits that I looked at all allow you to quickly and accurately cut joints on the router table that would be tricky or next to impossible to do otherwise. The key is that each "single" bit cuts both halves of a locking joint.

These bits are all fairly big, so you'll need a router with a 1/2" collet and enough horsepower to handle them. And I got the best results by slowing them down with a variable speed router. (For sources, see page 49.)

1 Lock Miter Bit

I've seen lock miter bits in catalogs and on store shelves for a few years and the idea intrigued me. Just *cutting* an accurate miter on the table saw is no easy job. But then you still have to figure out how to glue and clamp the joint afterwards. Well, here's a router bit that can easily take the hassle out of both these operations.

▲ A lock miter bit can take a lot of the hassle out of cutting and assembling miter joints.

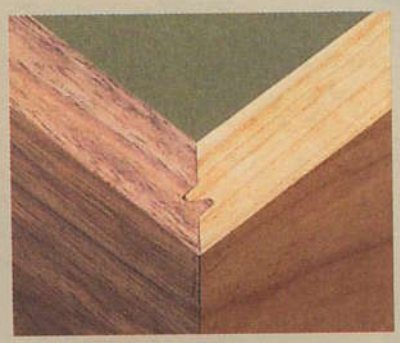

If you take a look at the photo below, you'll see how it works. The bit will cut a 45° miter on the ends or edges of boards to be joined together. At the same time it cuts matching tongues that "lock" the two halves of the joint together during assembly. This makes gluing and clamping the joint a snap.

As you can see in the drawings below and the photo above, the matching miter joint is made by running one piece horizontally and the other piece vertically.

To do this accurately and with better control, I cut an L-shaped plywood guide piece and then clamped the workpieces to it. (You can see it behind the workpiece in the photo above.) This both backs up the cut and steadies the workpiece as you make the cut.

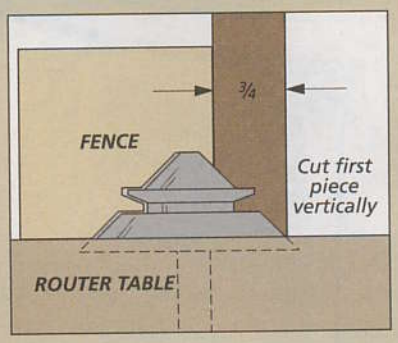

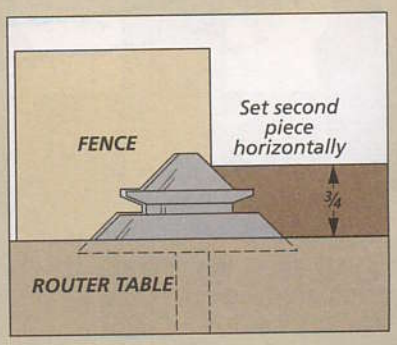

2 Box Joint Bit

This new box joint bit (made by *Amana)* gets my award for inventiveness. It will cut small box joints in material up to 1/2" thick and from 3/4" to 1 1/2" in height with a single pass. And as the photo at left shows, the result is an easy-to-assemble, tight-fitting joint. But maybe best of all, I found it a real treat to use.

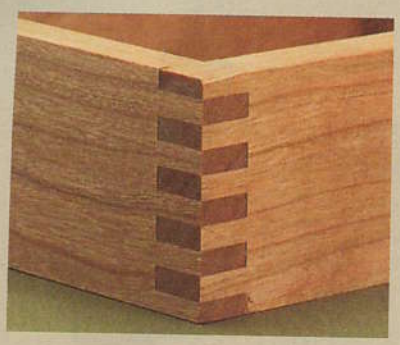

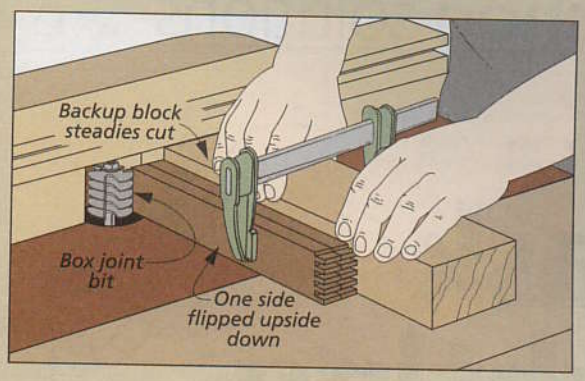

The drawing at right shows how it works. I cut one corner at a time by flipping one of the workpieces upside down and then clamping both workpieces to a backup block. Then with a single pass across the bit, both halves of the joint are cut simultaneously. After the cut, just flip one piece over and the joint will fit together like a hand in a glove.

▲ With this clever bit you can cut box joints for small drawers and boxes.

3 Glue Joint Bit

Edge joining boards is a pretty common operation in any shop and this handy glue joint bit is designed to make the process a little easier and the joint stronger.

The glue joint created by this bit offers a couple of advantages over a simple butt joint. As you can see in the first photo at right, the shape of the joint greatly increases the amount of gluing surface and gives you a much stronger joint. Second, the joint becomes self aligning so achieving a smooth, flush surface is almost foolproof (second photo below). Anyone who has had to glue up large panels can certainly appreciate this feature.

A match is made by adjusting the bit to the proper height and then routing one piece face up and the second piece face down. It worked great for me.

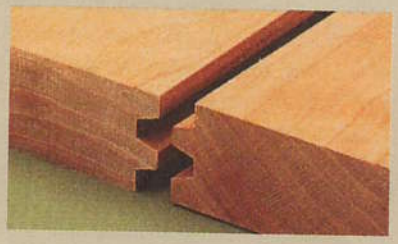

▲ A glue joint bit will create a strong, self-aligning joint.

4 Finger Joint Bit

At one time or another, just about every woodworker has wished for a board stretcher. Well, the adjustable finger joint bit in the photo at right might be the next best thing. With this bit, you can rout tightly interlocking fingers on the ends of boards that allow you to join them together. The fingers create both a mechanical lock and a large amount of gluing surface. And as you can see, end-to-end joints are a reality. (Check out the cherry/walnut board in the left photo).

There are just a few simple tricks to getting good results with this bit. First, it needs to be adjusted to the thickness of your stock. This just involves adding or removing cutters and shims (right photo).

Next, in order for the two faces of the workpieces to end up flush, the bit has to be set to the correct height in the router table (drawing at right). This requires a test cut or two. Then, using a backup piece to to give me a little better control, I routed one piece face up and one face down. Once glued, the joint is surprisingly strong. W

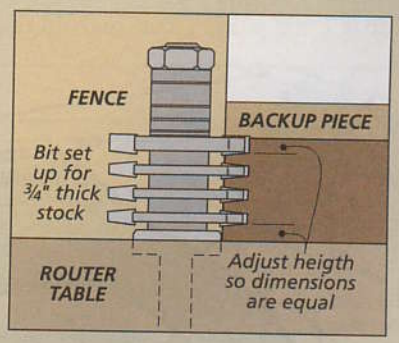

▲ This adjustable finger joint bit will cut a tight-fitting interlocking joint in stock from 7/16" to 1 3/8" thick.

Task Lighting

5 versatile lamps you can use to brighten your shop.

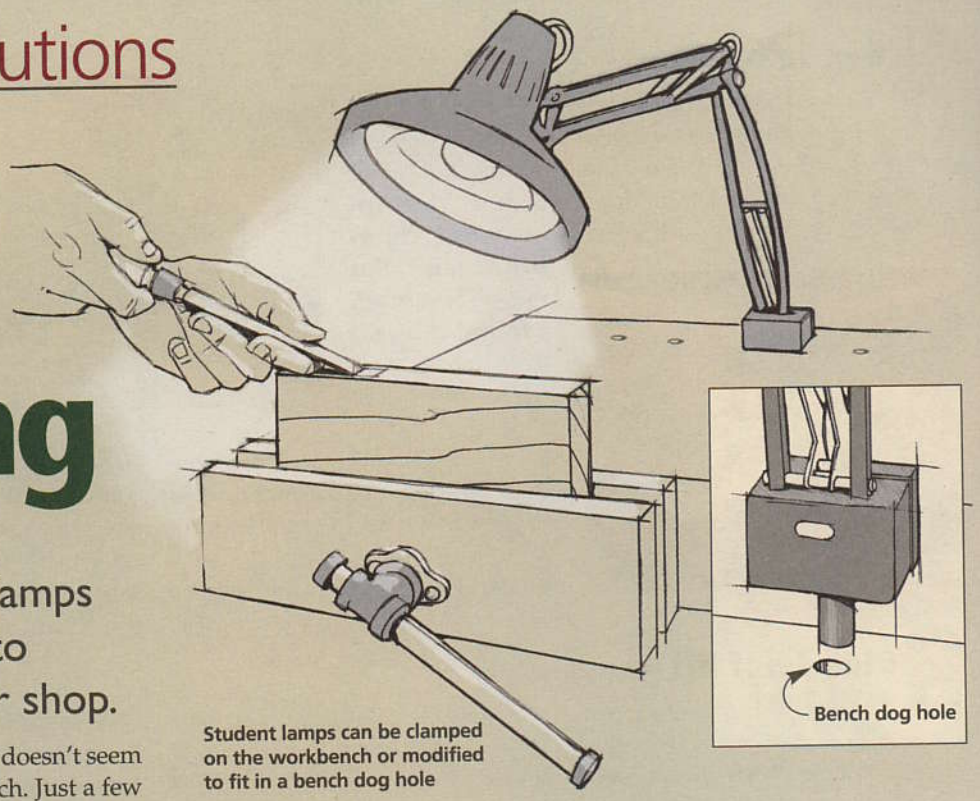

Student lamps can be clamped on the workbench or modified to fit in a bench dog hole

Lighting a small shop doesn't seem like it would take much. Just a few overhead lights, maybe a window or two and you're good to go. But when it comes to highly detailed work like fitting joints by hand or cutting to a line, I prefer to have something a little more focused.

The type of lighting I'm talking about here is called "task" lighting. It's putting the lights right where you need it and this can be tricky. But I've found a few solutions that you can put to use in your shop.

Adjustable Lamp

When I'm working at my bench, the overhead lights work just fine most of the time. But leaning over the piece I'm working on can cause shadows that interfere with fine work. To solve this problem, I bought an inexpensive, flexible-arm lamp, as you can see in the drawing above.

These lamps are sometimes called "student" lamps and you can find them at most department stores or home centers.

LIGHT WHERE YOU NEED IT. Most of these lamps have a built-in clamp. My bench is too thick for the clamp so I modified the lamp to fit in a bench dog hole (detail above). This way, I can easily focus the lamp almost anywhere on the bench .

The lamp's swivel base and flexible arm make it easy to reposition the light so it's shining on the work and not in your face.

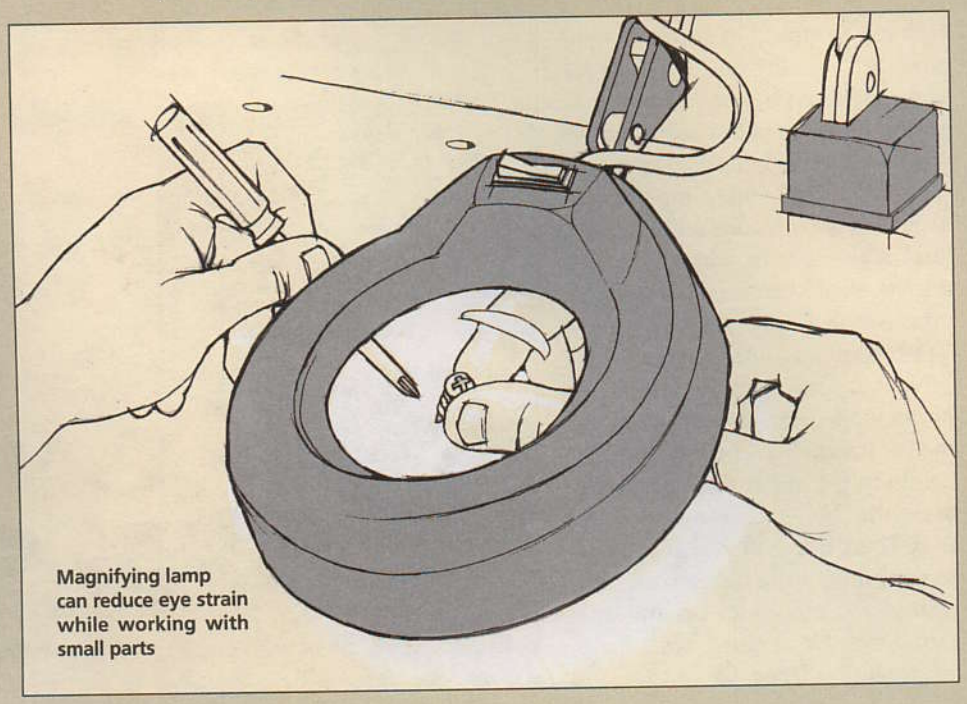

Magnifying lamp can reduce eye strain while working with small parts

Magnification Lamp

A flexible-arm light is great for adding a focused light source to your workbench, but as I get older, it's harder to see small parts and fine lines. Rather than use a "Sherlock Holmes" magnifying glass, I've found a magnification lamp that combines a light with a magnifying lens (drawing at left). You can find them at office supply and art stores.

The thing I like best about these lamps is that it keeps both hands free. You're sure to find uses for this lamp beyond woodworking jobs. I use mine for reading manuals, repairing small appliances, and removing splinters.

Halogen: Bright lights — low cost

Besides fluorescent and incandescent lights, you have another type of light to choose from — halogen. They lights have a couple of advantages. For one, they're smaller than fluorescent lights, and secondly, they use less electricity than incandescent bulbs. I've found three styles that work great in my shop.

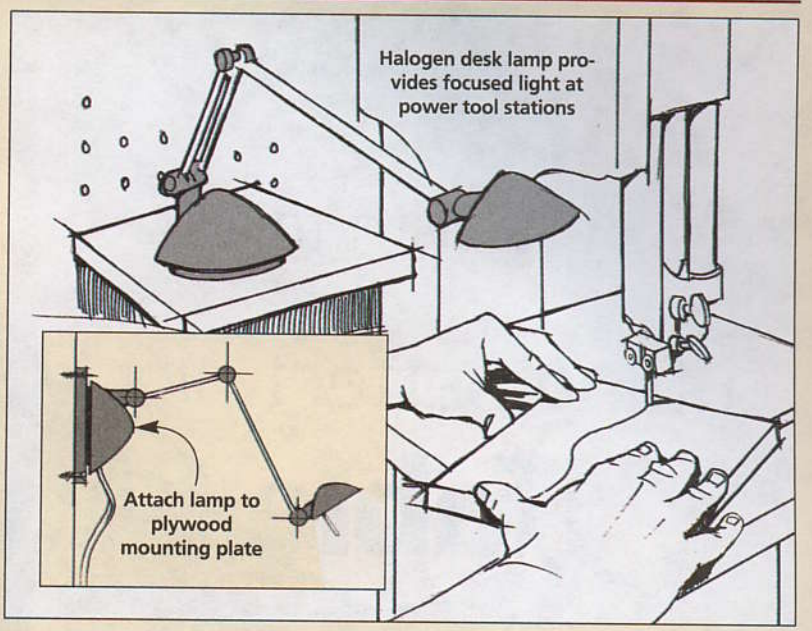

Tool Station Light

The first style is shown in the drawing at right. It's a small, desk lamp that I found at an office supply store. It looks similar to the student lamp shown on the opposite page — only smaller. It has an adjustable arm that makes it easy to position the beam. And the small head means it won't get in the way of your work.

To use it, I mounted small shelves on the wall near the band saw, drill press, and several other tools. Now I can take the lamp with me and set it close by for extra light. You could also attach the lamp to a plywood plate and mount the lamp on the wall, as in the detail.

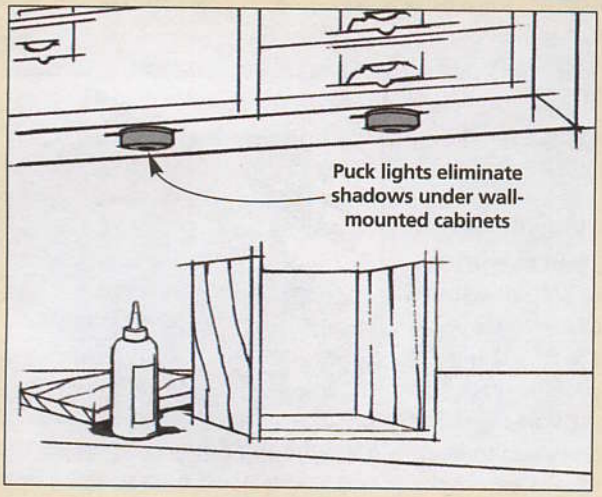

Under-Cabinet Lights

The shadows cast by the wall-mounted cabinets in my shop make it difficult to work below them. Since space is tight, there's just no room for another type of lamp or light. So stuff ends up getting piled under them and forgotten.

To solve this problem, I turned to a second style of halogen lights — under-cabinet lights. They're sometimes called "puck" lights because they look like hockey pucks. They're usually screwed to the bottom of upper kitchen cabinets, but they work just as well under shop cabinets, as you can see in the drawing at left.

The puck lights actually help me make better use of the space in my shop. Because they're tucked under the cabinet, they don't take up much space. Yet, they really light up the area.

You can pick up these lights at most home centers. They come either as single units or in groups (usually three or five) and simply plug into a wall outlet.

Hanging Flood Light

The desk light and the puck lights are great for lighting up a small area with intense light. But what if you want to light up a larger work space? To do that, I bought a portable, halogen work light.

These lights typically rest on the floor on a built-in tubular stand. But I mounted mine to the ceiling above the table saw, as you can see in the drawing at right. To do that, all you need to do is screw in a couple screw eyes to the ceiling joints and slide the lamp's stand into them. The unit I got has a 500-watt bulb in it, which really brightens things up.

There's just one thing to note. These lights can get pretty hot. This can be nice if you're working in an unheated garage on a cold day. In fact, I can break a sweat just working beneath one. In any case, you'll want to make sure the ceiling is high enough for you to work comfortably under one. W

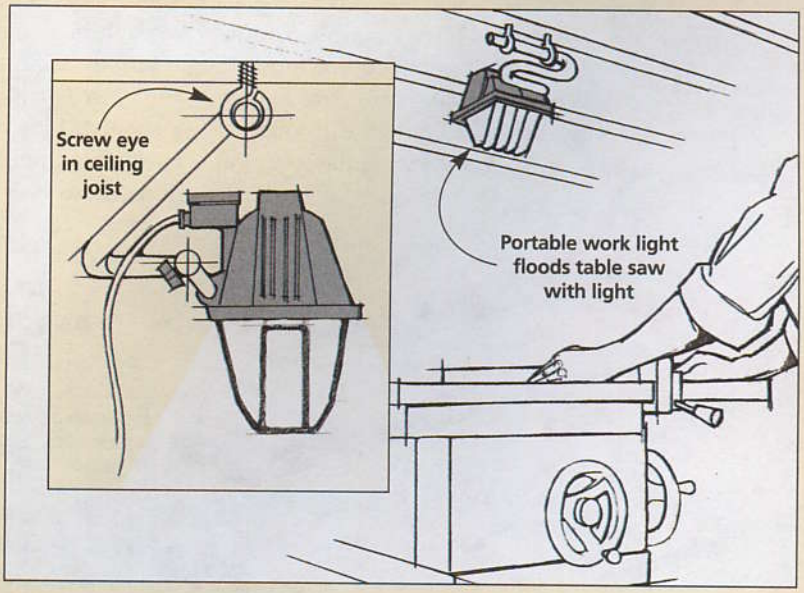

working with tools

cutting perfect pieces on your Table Saw

Here's how to get your next project off on the right foot — 4 steps for success.

"Start by cutting the workpiece to size." It sounds easy, doesn't it? But just about every woodworker, myself included, will admit to having goofed at this supposedly simple task on a few occasions. A piece of stock ends up too short, not straight, or out of square. Sometimes this isn't a big deal, but other times it comes back to bite you.

So now I have a simple routine that I follow when cutting stock to size on the table saw. And for the most part, it limits the amount of wood that ends up in the scrap bin.

SIZE AS YOU GO. Usually, when building a project, you're working on one assembly or step at a time. For example, doors, drawers, or case parts. So this is how I like to approach cutting parts to size. Just size the pieces that you need for the job at hand. It's easier to keep things straight and you can make minor "size" adjustments as you work through a project.

A CUT LIST. Before you start cutting, you need a goal. And for me, this is a cut list. I jot down a list of the parts that I need to cut and their dimensions (thickness, length, and width). Even when I'm only cutting a part or two, I write down the dimensions. It's too easy to remember a "wrong" measurement.

And if you have a lot of pieces to cut to size, check them off the list as you complete them. Then all you'll need to do is take a quick glance at your cut list to tell if you have all the parts you need. You don't want to get halfway through the joinery and realize that you're short one door rail or drawer side.

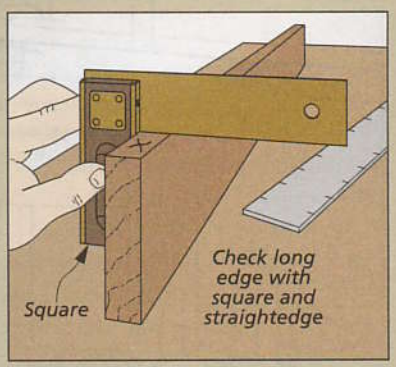

Straight and Square. *To get started right, you need one straight and square reference edge to work from.*

ROUGH CUT. Once I know what size pieces I need, I rough-cut the parts from the stock at hand. At this point, all you're trying to do is get in the ballpark. It's easier for me to work with and acccurately size smaller pieces. I just try not to skimp here. For example, if I need a 2" by 24" stile, I try to give myself about a $2^1/_8$" by 25" piece to work with. But the rough dimensions you use will depend on the stock you're working with (end checks, knots and width of the boards).

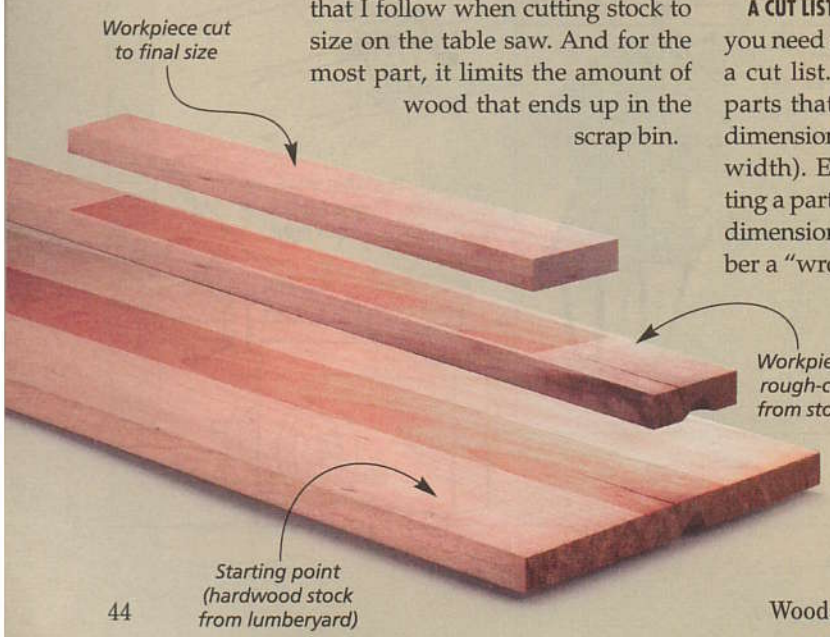

ONE STRAIGHT, SQUARE EDGE. With the rough-sized pieces in hand, the next goal is to give each piece one straight and square edge. This edge will guide your first rip cut. A straightline rip jig on the table saw, a handplane or a pass over the jointer will do the job. Before moving on, make a quick check with a straightedge and square and then mark the straightened edge (box below left).

THE FOUR STEPS

Now you're ready for the four dimensioning cuts that you see illustrated in the drawings at right.

TWO PARALLEL SIDES. The first step is to rip the workpiece *close* to its final width (Step One). I never try to hit the final dimension right on the money. The purpose is just to make sure that both long edges are straight and parallel. An extra $^1/_{32}$" or $^1/_{16}$" in width is plenty. This leaves enough material to allow you to come back later and clean up this face — eliminating saw marks, burn marks, or tearout from crosscutting. And with straight, parallel edges to work from, you'll have a much easier time getting square ends when you crosscut to length.

ONE SQUARE END. Once you have two straight edges, begin cutting the workpiece to length by making a clean, square crosscut on one end. But don't get carried away here, this is usually just a light trim cut. Be sure to leave yourself enough length for the final cut.

The ends of the workpieces are often where the joinery takes place, so it pays to get this step right. And the key to accurate crosscuts is control of the workpiece. For this I rely on a miter gauge with a long auxiliary fence as shown in Step Two. This gives you a solid backing for the workpiece that allows a controlled feed and limits tearout. A smooth, steady feed produces the best crosscuts. Too slow and the wood burns — too fast and you'll end up with a ragged or inaccurate cut.

If I've got a stack of parts to cut to length, I'll square one end of all the pieces before cutting any to final length. It's just more efficient. A mark on the squared end will help keep things straight (see main photo).

CUT TO LENGTH. Now you can make the final crosscut to length. And more often than not, you're going to want to cut several pieces to identical lengths. Door rails and stiles, and face frame parts are a good example.

So rather than measure and cut each piece and hope for the best, I set up to cut "multiples." This involves measuring and marking one piece and then using this piece to set up the saw for cutting the remaining identical pieces to length. A stop block on the miter gauge can be adjusted as you sneak up on the length of the measured piece, as shown in Step Three. The length of the pieces that follow will be exactly the same.

THE FINAL EDGE. At this point your workpiece is cut to length and has one clean, square edge. But it's still a little overwidth. A light rip cut removes the extra width and cleans the final edge (Step Four and main photo).

That's all there is to it. At this point, the workpieces are square and true to size. But the best thing is that you can move on with one less thing to worry about. W

4 Steps for Perfect Pieces

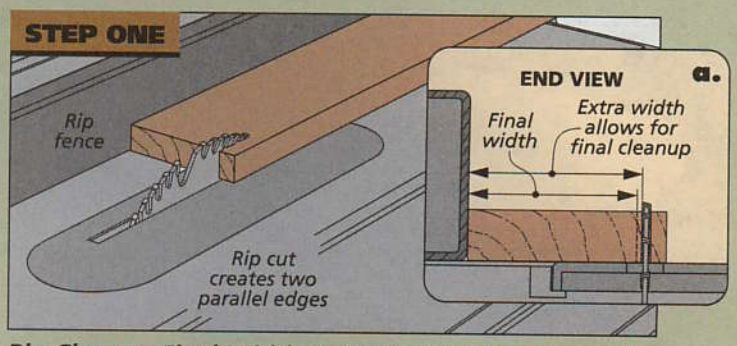

Rip Close to Final Width. *With the straight, square edge against the fence, rip the workpiece close to its final width. The extra width allows you to clean up this face with the final cut.*

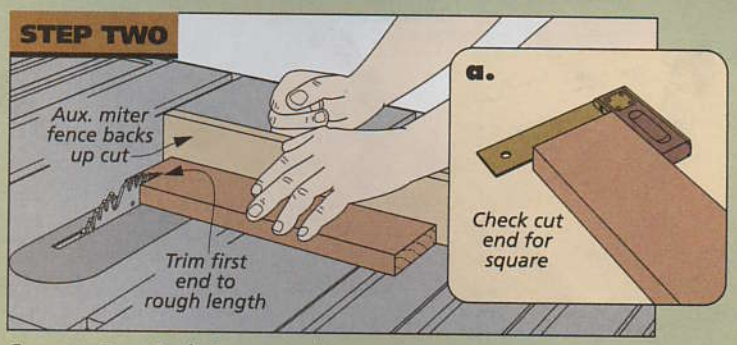

Square One End. *Once you have two straight, parallel edges, you can begin crosscutting the workpiece to length. Start with a square, trim cut across one end of the piece.*

Final Length. *A second crosscut on the opposite end gives you the final length. An auxiliary miter gauge fence with a stop block clamped to it makes multiple cuts quick and accurate.*

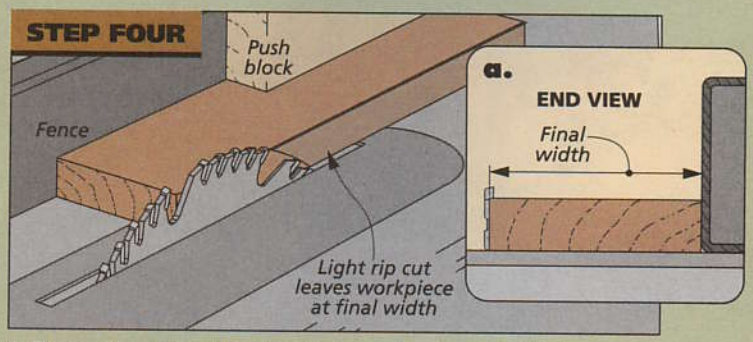

A Clean Rip. *Once the piece is cut to length, a light rip pass on the face you cut in step one, will give you the final dimension. Any rough saw marks, burn marks, or tearout will be removed.*

artist's oil colors

Mixing Your Own Stain

You know the sick feeling you get when you wipe on a stain and know it's not what you want? The problem is the color I'm looking for seems to be in between the stains available.

You could buy a bunch of cans and try mixing stains until you find the color you want. But I've found there's an easier way to get the perfect stain color — I mix my own.

I know, it sounds complicated. But with a few artist's oil colors and some boiled linseed oil, it's as simple as one-two-three.

1 Basic Browns

What makes mixing your own stains from artist's colors so great is you can mix small amounts until you find just the right color to apply to your project. Though you might feel a little intimidated by the number of colors available, you can get started with eight colors: five basic browns and three accent colors.

For the basic browns, I use Vandyke Brown, Raw Sienna, Burnt Sienna, Raw Umber, and Burnt Umber. As you can see in the photo at left, they provide a broad range of wood-like colors.

The first step in mixing your own stain is to establish the background color with one of the basic browns. For the tip-and-turn table on page 30, I chose a combination of burnt umber and burnt sienna to get the background color.

2 Accent Colors

Once you've chosen the background color, you can add an accent color to reach the final stain color. Here again, you only need a few. The three that I use are Cadmium Red, Cadmium Yellow, and Black (photo at right).

Adding yellow to the mix lightens the color for pine, maple and "golden oak" stains. Red "warms" up the color for cherry and mahogany stains, like the tip and turn table on page 30. Ivory Black works great for Walnut or "Ebonized" stains.

It's a good idea to write down the "recipes" as you go. Then when it comes time to mix up a big batch, it's easy to reproduce the color. To keep track of the ratios of color, I squeeze the paint onto a small scrap, as you can see in the lower margin photo. This makes enough stain to get a good idea of what the color looks like.

The accent colors are a little intense, so go easy when adding them to your stain. It's better to start with a small amount sneak up on the color you want.

▲ Add just enough boiled linseed oil to the artist's oil colors to make them easy to mix together.

3 Mix with Oil

The final ingredient to the stain is an oil. For this, you could use any type of oil finish, but I prefer boiled linseed oil. The oil provides a base for mixing the artist's oil colors together and the driers added to the boiled linseed oil help the stain dry quicker.

How much oil you add is really up to you. Because I wanted a fairly thick stain (like shampoo), I used just enough oil to get the colors to mix, as you can see in the photo at left. The reason is that a thick stain gives you a longer working time before the excess needs to be wiped off. And the thick, gel-like consistency penetrates slowly to prevent blotching.

After stirring the ingredients together, I wiped it on a test piece. Depending on the result, you can add more of the basic brown or the accent colors to do some tweaking. Or simply start over.

Once you're satisfied with the result, you can mix up a larger batch based on your recipe and apply it to the project. For some tips on working with shop-made stain, take a look at the box below. After the stain dries completely (usually overnight), you can apply the finish of your choice. W

▲ A piece of scrap makes a handy "measuring stick" to squeeze out uniform amounts of artist's oil color.

How-To: Working with Shop-Made Stain

Brush on the Stain. Apply the stain in a heavy coat. A foam brush makes it easy to spread and can get into corners.

Wipe off Excess. After several minutes, you can wipe off the excess stain with a rag. The longer you wait, the darker the color will be.

Touch up the Color. A rag moistened with paint thinner can be used to lift off stain from end grain to even out the color.

why use a Tapered Sliding Dovetail?

You won't find a better joint for connecting the column and the legs of the "tip and turn" table.

You may be curious about why I chose to use a tapered sliding dovetail to join the legs to the column of the tip and turn table. Well, the answer involves both a little history along with some modern techniques.

Most of the old examples of this style of table used a turned, round column. And the joint used to attach the shaped legs to the round column was almost always a straight-sided "sliding" dovetail.

The basic anatomy of this joint is shown in the drawings at the top of the opposite page. A long dovetail shaped socket was cut into the base of the column. Then a matching dovetail was cut onto the upper end of the leg. When the dovetail slides into the socket, the leg is locked tightly to the column.

THE DRAWBACKS. Unfortunately, it's not as easy as it sounds. First of all, you have to figure out how to fit the legs to a round column. As you can see, the solution was to relieve the shoulders of the dovetail on the leg to match the curve of the column. But, the thought of trying to do a good job at this tricky handwork is pretty intimidating.

And if curved shoulders aren't enough, you still have to deal with getting a good fit along the 3" or 4" length of the joint. If the fit gets sloppy, you lose the "built-in" lock *and* the joint's strength. The problem is that you can't really see

what's going on inside the joint. So you end up working by feel as you trim a little here and a little there. You might get it right, but the margin for error is pretty high.

Then comes the glueup. The fit seems perfect — not too loose or too tight. So where do you put the glue and how much? You may be tempted to spread glue along the entire length of the dovetail and the socket. But then you run the risk of the glue swelling the wood during assembly. The result could be a leg that "freezes up" in its socket and won't come out.

Or you could choose the opposite route and spread glue lightly at the bottom of the socket and the top of the dovetail. But as the dovetail slides into its socket, the glue is forced out of the joint and you end up with a "dry" assembly.

You get the picture. So the question was, "How can I make a pedestal with a traditional look and traditional joinery while avoiding the difficult challenges?"

A FLAT-SIDED COLUMN. For starters, I decided that a six-sided column with flat faces would give me the right look *and* make the column-to leg fit a whole lot easier. Now you're just cutting a *square* shoulder on the dovetail to mate with a *flat* surface on the column.

But this still leaves the problem of getting a snug fit on the *inside* of the joint. And this is where modern techniques can make all the difference. A column with flat surfaces opens up the possibility of using a router to accurately cut this joinery and even improve upon it.

TAPERED DOVETAIL. It stands to reason that if the dovetail and the socket are both tapered along their length, both the fit and the assembly would be easier. You might think that cutting and fitting a tapered sliding dovetail would be more difficult. But actually, the router jigs and setups I used made it easy (see page 28).

Imagine a tapered dovetail halfway into its socket. Because the joint tapers in two directions, there's no wood-to-wood contact. It's only when the dovetail is seated in the socket that the two meet to lock the leg to the column. And the socket routing jig allows you to fine-tune the fit so that the two parts of the joint make contact at just the right spot (box below).

The taper of the joint also takes a lot of uncertainty out of gluing the legs to the column. Since the leg doesn't snug up until it reaches the end of the socket, the glue in the joint won't grab until the leg is almost seated. You can fit the joint snug and not have to worry about a leg getting stuck in the socket.

And as the dovetail slides into the socket, the shoulders are pulled tightly to the face of the column and the joint becomes seamless. You probably won't need clamps.

It's pretty hard to match the fine craftsmanship of the past. But with a good starting point and some modern tools and techniques, you can sometimes do just that. W

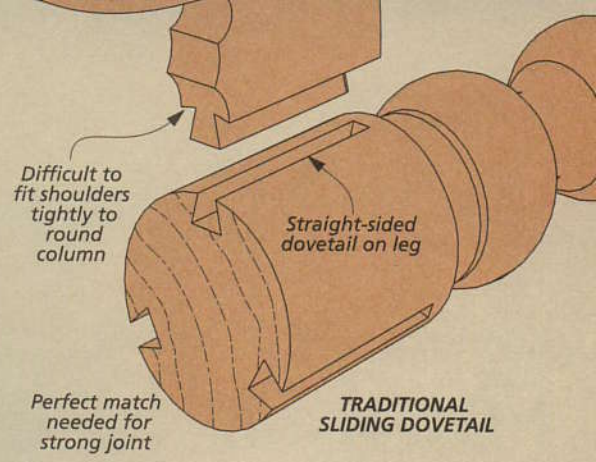

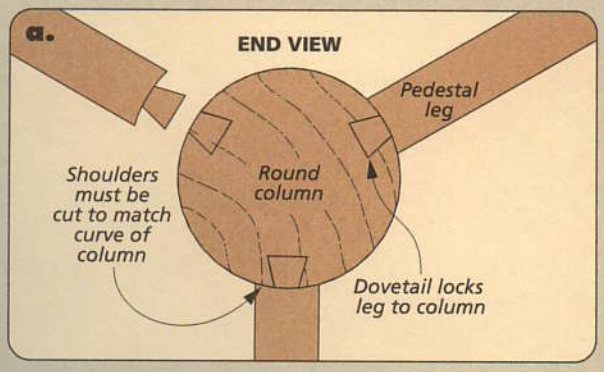

Getting the Right Fit

A tapered sliding dovetail needs to fit well in two ways. First, the leg and the socket need to have the same amount of taper so that the joint is tight along its entire length. (left drawing). The greatest stress on the joint will be at the bottom. This is where the leg will want to pull away from the column. So I made doubly sure the fit was tight here.

When the taper is right, you can work on fitting the leg to the right depth. You want the dovetail to grab in the socket just before the leg and column are flush. It should take a firm tap or two from a mallet to fully seat the leg (detail 'a').

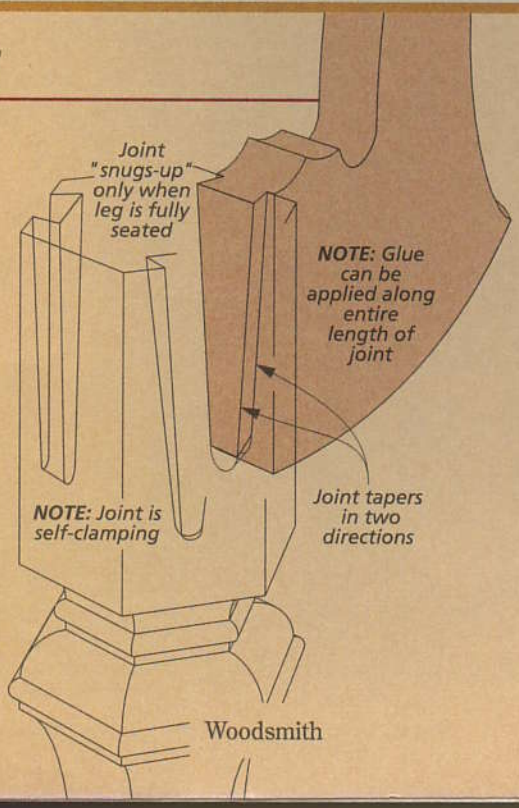

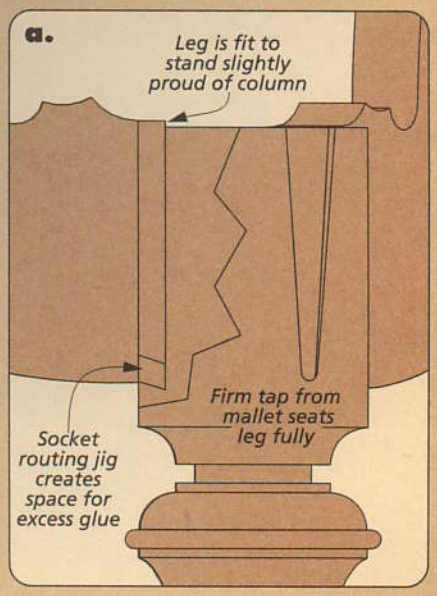

looking inside
Final Details

▲ *Tip and Turn Table.* You'll find a lot of interesting woodworking techniques packed into this little table — from routing tapered, sliding dovetails and building a "birdcage" swivel mechanism to making a twelve-sided top. But you can take it step-by-step with the plans that start on *page 30*.

Routing Dovetails. ► A half-blind dovetail jig can make routing perfect-fitting dovetails a snap. We'll show you how to get the best results every time. The article begins on *page 10*.

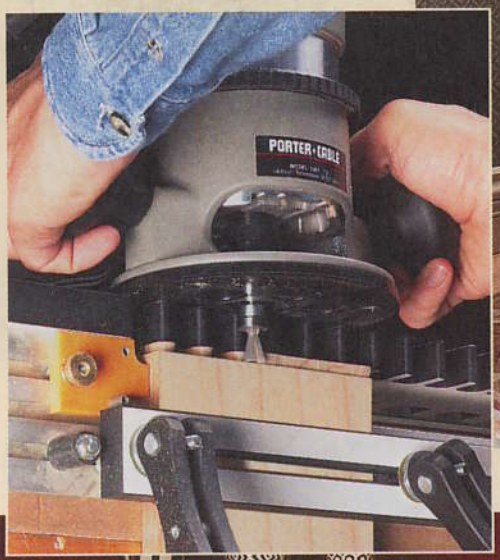

◄ *Corner Media Cabinet.* Whether you build just the lower cabinet or go all out and add the upper cabinet, you'll have plenty of space for a TV and all your entertainment gear. Detailed instructions begin on *page 20*.